DGG

BROCHURE / CATALOG >>>>>

https://www.dggpower.com

DGG 登高

DGG 登高

(H)RW5 – 40.5

DROP-OUT FUSE CUTOUT

OUTDOOR / THREE-PHASE / CERAMIC TYPE



登高电气有限公司
DENGGAO ELECTRIC CO.,LTD.

(H)RW9-40.5 OUTDOOR THREE-PHASE DROP-OUT FUSE CUTOUT

1. SUMMARY

(H)RWW5-40.5 series outdoor high-voltage drop fuse (hereinafter referred to as "fuse") is the most common short-circuit protection switch for distribution line branch and distribution transformer.

The fuse is suitable for short circuit and overload protection of transmission lines and power transformers in the power system with AC 50Hz and a rated voltage of 35kV. Under certain conditions, a no-load overhead line, no-load transformer, and small load current can be opened and closed.

Fuses are widely used in distribution lines and the primary side of distribution transformers as protection and equipment switching operations. It is installed on the branch of the distribution line to reduce the scope of power failure.

The fuse complies with technical standards such as GB / T 15166.3-2008 high voltage AC fuses Part 3: jet fuses, DL / T 640-1997 technical conditions for ordering outdoor AC high voltage drop out fuses and fuses.

The fuse complies with technical standards such as GB / t15166.2-2008 high voltage AC fuses Part 2: current limiting fuse.

2. MODEL AND MEANING

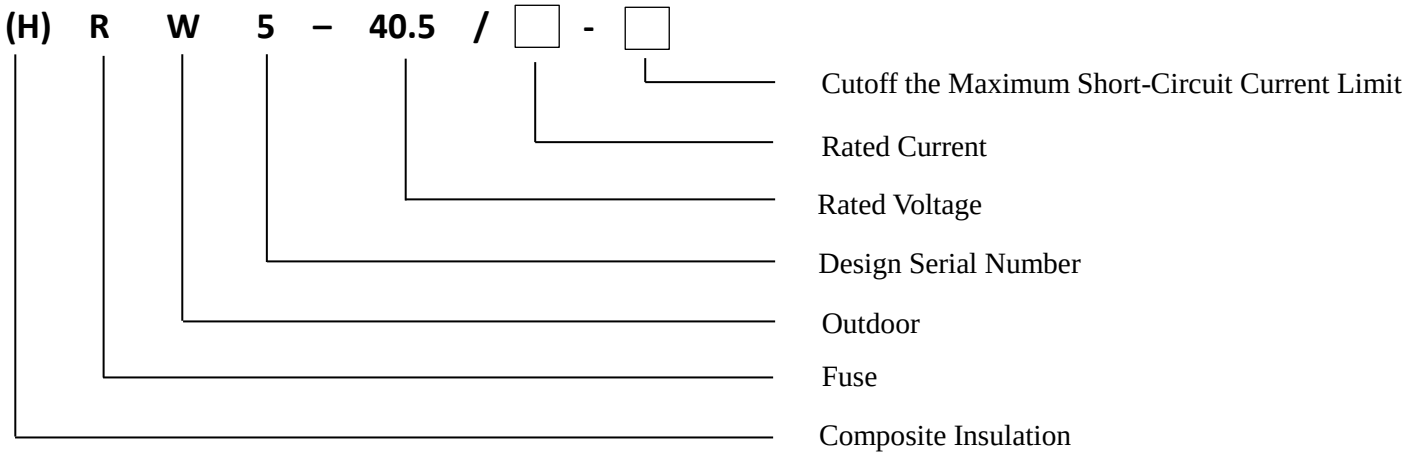

(H)RW5-40.5 OUTDOOR THREE-PHASE DROP-OUT FUSE CUTOUT

3. USAGE: ENVIRONMENTAL CONDITIONS

1. Altitude: No more than 4000m
2. The ambient temperature is not higher than + 40 °C and not lower than - 40 °C
3. There is a clear disconnection point with the function of isolating switch, which creates a safe working environment for the maintenance line and equipment and increases the safety of maintenance personnel;
4. Simple structure, high-cost performance ratio, convenient operation, and easy maintenance;
5. The product is not applicable to the following places:
   i. Places with burning or explosion hazards;
   ii. Places with violent vibration or impact;
   iii. Areas with conductive chemical gas and serious pollution and salt fog.
6. Strong adaptability to the outdoor environment;
7. Large climbing distance design to meet the operation requirements in high-altitude areas

4. MAIN ADVANTAGES

1. Insulating porcelain bushing or silicone rubber composite bushing are designed with large creepage distance, with strong pollution resistance and environmental adaptability, and good insulation performance, which can meet the requirements of long-distance travel in altitude areas.
2. Welding pipe replacement is simple and convenient
3. Fast fusing, good performance and large breaking capacity.

(H)RW5-40.5 OUTDOOR THREE-PHASE DROP-OUT FUSE CUTOUT

5. TECHNICAL PARAMETER TABLE

No.	Item	Unit	Technical Parameters	
1	Rated Frequency	Hz	50 / 60	
2	Rated Voltage	kV	40.5	
3	Rated Current of Fuse of the same family	A	100	200
4	Rated Breaking Current	MVA	6	8
5	Rated Short-Time Power Frequency Withstand Voltage (1-min)	kV / min	95/1 (To Earth)	
			118/1 (Fracture)	
6	Rated Lightning Impulse Withstand Voltage	kV	185 (To Earth)	
			215 (Voltage)	
7	Creepage distance	mm	More than 1256	
8	Mechanical Life	Times	300	
If the altitude is over 1000m, the rated insulation level should be modified as appropriate				

Note: If the parameters requested by the user are beyond the scope of the above table, they can be determined after consultation with our company.

(H)RW5-40.5 OUTDOOR THREE-PHASE DROP-OUT FUSE CUTOUT

6. OUTLINE AND INSTALLATION DIMENSIONS

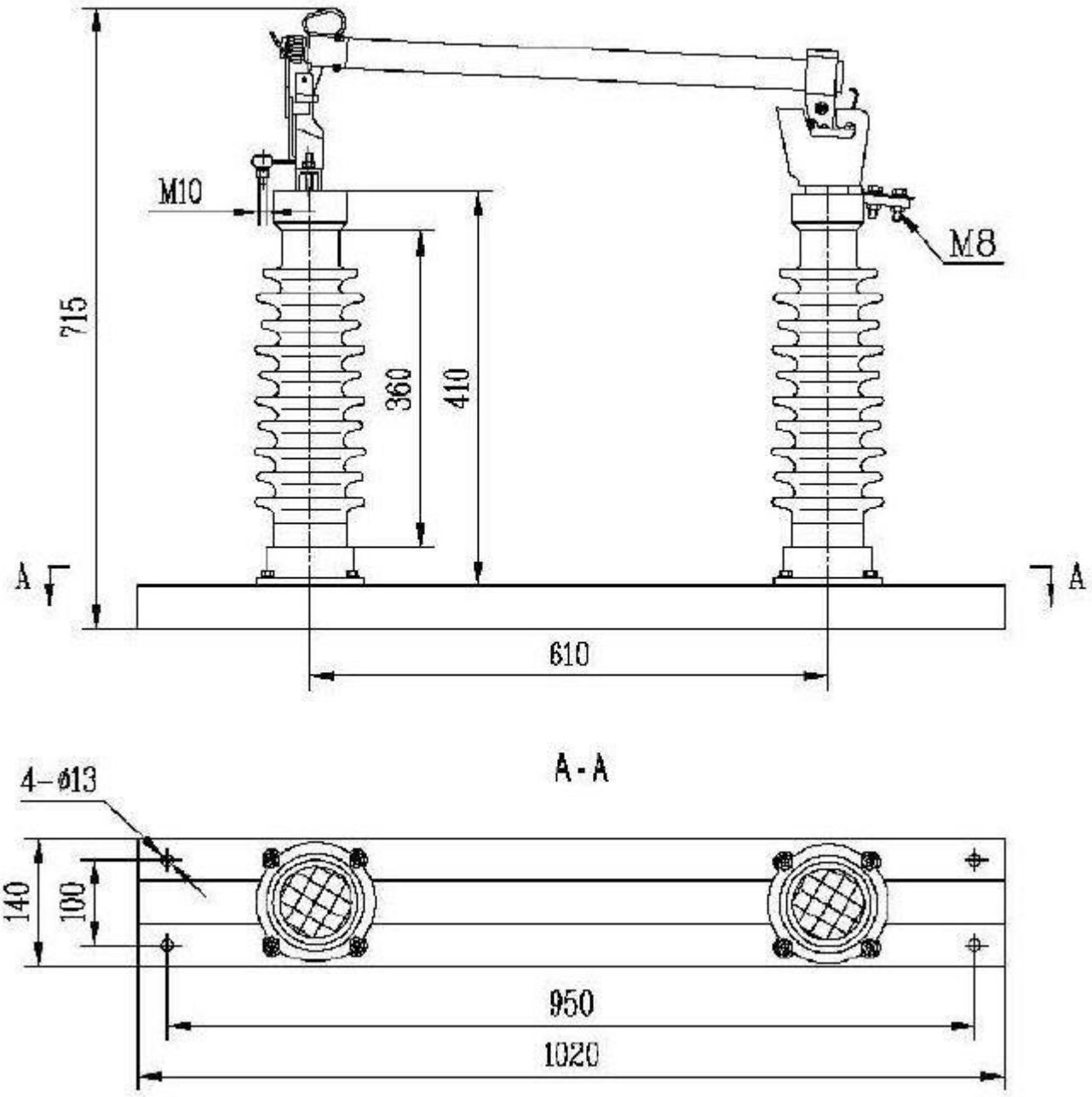

© DENGGAO ELECTRIC CO. LTD; ALL RIGHTS RESERVED

登高电气有限公司
DENGGAO ELECTRIC CO.,LTD.
HEADQUATERS: NO. 208 WEI WU ROAD, ECONOMIC DEVELOPMENT ZONE,
YUEQING-WENZHOU, ZHEJIANG-CHINA
PHONE NUMBER: 0577 – 57576678
WHATSAPP (BUSINESS): 0086 – 13758881699
WECHAT: 13758881699
FAX: 0577 – 62724983
EMAIL ADDRESS: sale@dggpower.com

DGG 登高