DGG

BROCHURE / CATALOG >>>>>

https://www.dggpower.com

DGG 登高

DGG 登高

(H)RW9 – 40.5

DROP-OUT FUSE CUTOUT

OUTDOOR / THREE-PHASE / CERAMIC TYPE

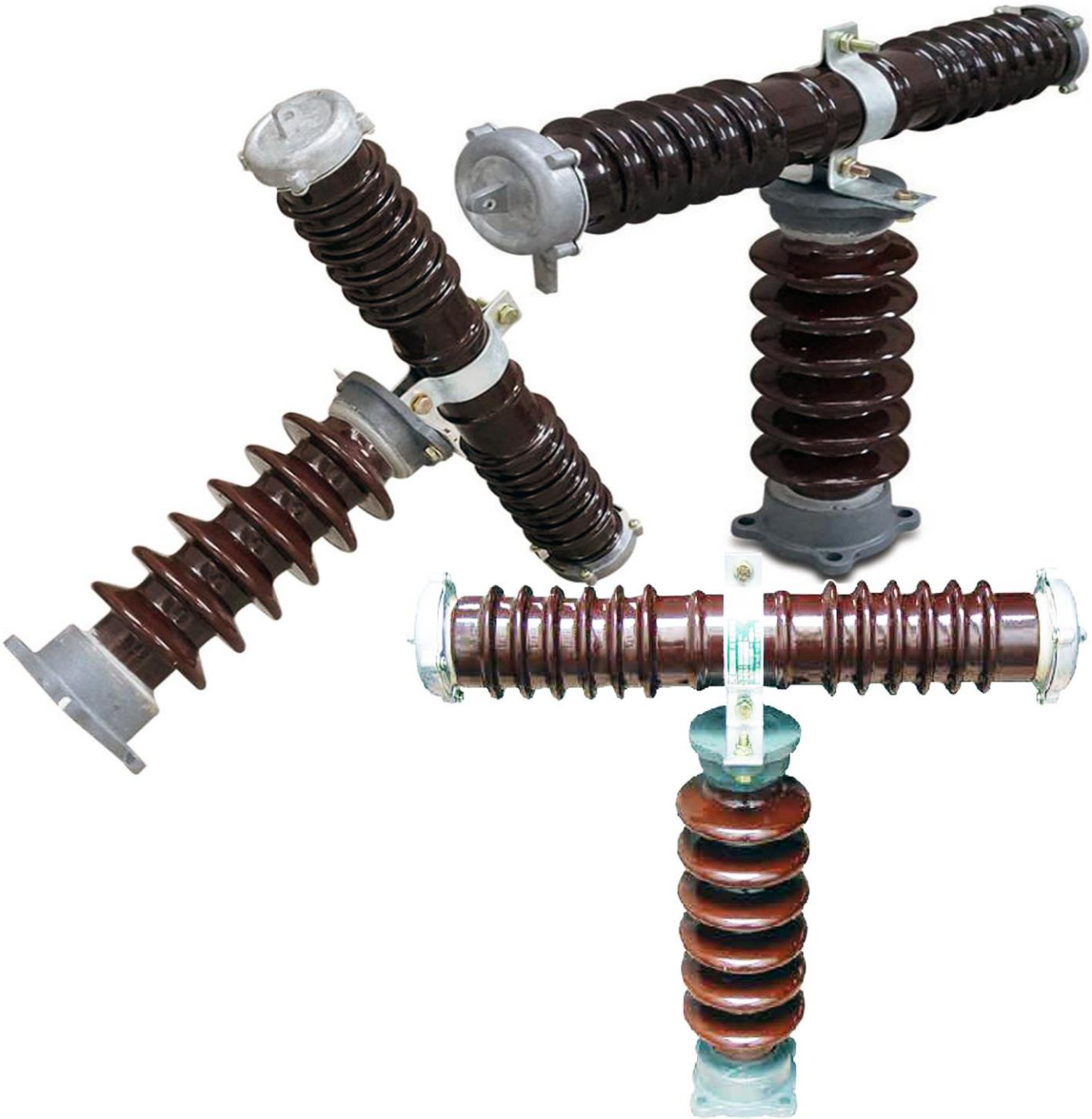

登高电气有限公司
DENGGAO ELECTRIC CO.,LTD.

(H)RW9-40.5 OUTDOOR THREE-PHASE DROP-OUT FUSE CUTOUT

1. SUMMARY

(H) RW9-40.5 series outdoor high-voltage current-limiting fuses (hereinafter referred to as "current limiting fuses") are outdoor high-voltage protection appliances, which are applicable to the power system with AC 50Hz and rated voltage of 35kV, and are used for overload and short-circuit fault protection of power transformers and power lines.

The fuse complies with technical standards such as high voltage AC fuses Part 2: current-limiting fuses (GB / T15166.2-2008).

2. MODEL AND MEANING

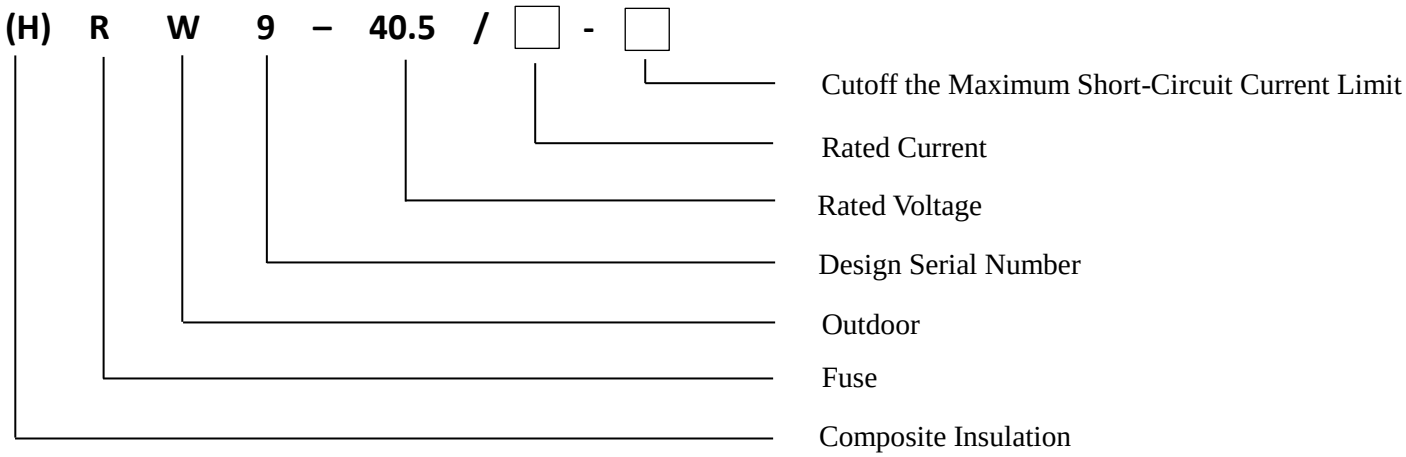

3. USAGE: ENVIRONMENTAL CONDITIONS

1. Altitude: Not more than 1000m
2. Ambient air temperature: maximum +40 ℃, minimum - 25 ℃, daily temperature difference 25K
3. Humidity: daily average relative humidity ≤ 95%, monthly average relative humidity ≤ 90%
4. Solar Radiation Intensity (outdoor)/ Pollution level: 0.1W/cm^2 / e-level
5. Winding speed / pressure (outdoor): 34m/s / 700Pa
6. Earthquake resistance: horizontal acceleration 0.3 m/s^2, vertical acceleration 0.15m/s^2
7. Icing thickness: not more than 10mm

(H)RW9-40.5 OUTDOOR THREE-PHASE DROP-OUT FUSE CUTOUT

4. MAIN ADVANTAGES

1. Insulating porcelain bushing or silicone rubber composite bushing are designed with large creepage distance, with strong pollution resistance and environmental adaptability, and good insulation performance, which can meet the requirements of long-distance travel in altitude areas.
2. Welding pipe replacement is simple and convenient
3. Fast fusing, good performance and large breaking capacity.

5. TECHNICAL PARAMETER TABLE

No.	Item	Unit	Technical Parameters		
			(H)RW9-35/0.5-20	(H)RW9-35/2-20	(H)RW9-35/(3~10)-20
1	Rated Frequency	Hz	50 / 60		
2	Rated Voltage	kV	40.5		
3	Rated Current of Fuse of the same family	A	0.5	2	3 ~ 10
4	Breaking capacity (three-phase)	MVA	1000	200	
5	Cut off the maximum short-circuit current limit	kA	20		
6	Rated (1-min) Power Frequency Withstand Voltage	kV / min	85 (Phase, to Earth)		
			110 (Base's Isolation Fracture)		
7	Rated Lightning Impulse Withstand Voltage	kV	180 (Phase, to Earth)		
			200 (Base's Isolation Fracture)		
8	Overvoltage times shall not exceed	Times	2.5		
9	Creepage distance	mm	≥ 1256 (e-level)	≤ 1013 (d-level)	
10	Mechanical Life	Times	500		
11	Protected objects		Current Transformer	Voltage Transformer	
If the altitude is over 1000m, the rated insulation level should be modified as appropriate					

Note: If the parameters requested by the user are beyond the scope of the above table, they can be determined after consultation with our company.

(H)RW9-40.5 OUTDOOR THREE-PHASE DROP-OUT FUSE CUTOUT

6. OUTLINE AND INSTALLATION DIMENSIONS

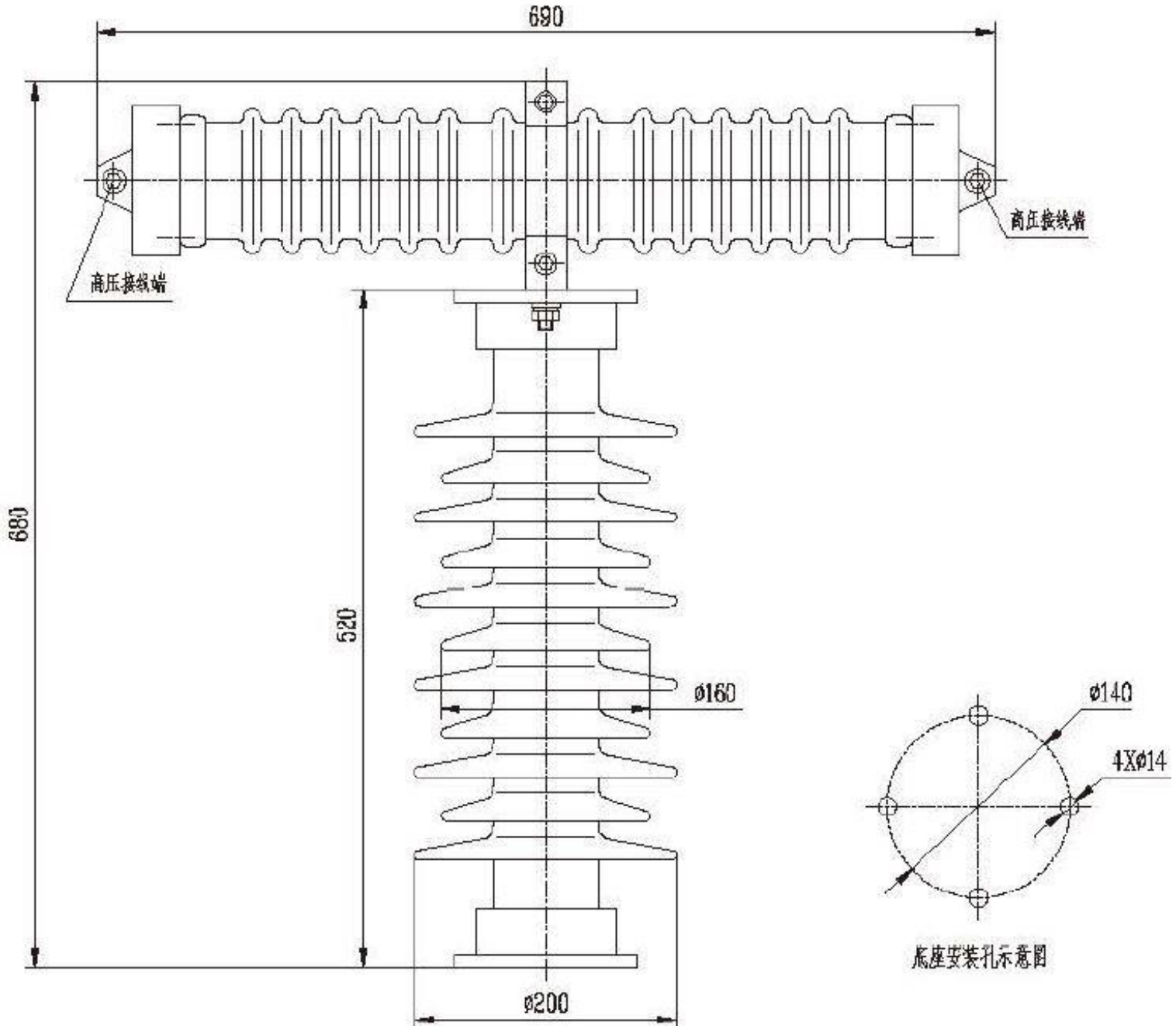

© DENGGAO ELECTRIC CO. LTD; ALL RIGHTS RESERVED

登高电气有限公司
DENGGAO ELECTRIC CO.,LTD.
HEADQUATERS: NO. 208 WEI WU ROAD, ECONOMIC DEVELOPMENT ZONE, YUEQING-WENZHOU, ZHEJIANG-CHINA
PHONE NUMBER: 0577 – 57576678
FAX: 0577 – 62724983
EMAIL ADDRESS: sale@dggpower.com

DGG 登高