PRINTED ON ECO PAPER

DENGGAO ELECTRIC CO., LTD. ALL RIGHTS RESERVED BY

DGG®

TRANSFORMER PRODUCT SELECTION MANUAL

DGG

TRANSFORMER PRODUCT SELECTION MANUAL »»›

www.dggpower.com

DGG®

DENGGAO ELECTRIC CO., LTD.

DENGGAOYUN IMP&EXP (ZHEJIANG) CO., LTD.

Add: No.268 Weiqi Road, Yueqing Economic Development Zone,
Yueqing, Wenzhou, Zhejiang Province, China

Tel: (86-577)-57576678

E-mail: dgg@dggpower.com

http: //www.dggpower.com

DGG®
DENGGAO ELECTRIC

Company profile

Denggao Electric Co., Ltd. was founded in 2005 and is headquartered in the Economic Development Zone of Yueqing City. After more than a decade of hard work, it has developed into a modern enterprise that integrates research and development, design, manufacturing, trade, and service without any regional boundaries.

The company takes "building a technology-based, innovative, outward oriented, and diversified strong enterprise" as its development strategy, relying on core technologies with independent intellectual property rights, focusing on exploring the field of high and low voltage electrical manufacturing. Its leading products cover (intelligent) high-voltage vacuum circuit breakers, user boundary vacuum load switches, isolation switches, fuses, intelligent high and low voltage prepaid sales terminals, intelligent distribution terminals, (prepaid) high-voltage power metering boxes, transformers, lightning arresters, composite insulators, high and low voltage complete switchgear, building electrical appliances, etc; The product is widely used in fields such as power grids, power plants, power stations, petrochemicals, metallurgy, coal, railways, transportation, communication, and urban infrastructure. As a system service provider for the State Grid and Southern Power Grid, Denggao Electric undertakes and completes a large number of major domestic engineering projects, helping China's smart grid technology lead the world.

The company adheres to the business philosophy of "quality oriented, technology driven, brand marketing, and harmonious development", continuously increases research and development investment, comprehensively promotes product technology transformation and upgrading, and has established extensive cooperative relationships with well-known domestic universities and research institutions such as the Industrial Technology Research Institute of Harbin Institute of Technology, the School of Electrical Engineering of China Agricultural University, and China Metrology University, and has achieved many pioneering scientific research results. The company has won 34 provincial-level new products in Zhejiang Province; Has been rated as a national high-tech enterprise, a postdoctoral research workstation in Zhejiang Province, an enterprise industrial design center in Zhejiang Province, a clean production enterprise in Zhejiang Province, a research and development center for high-tech enterprises in Zhejiang Province, and a specialized, refined, special, and new small and medium-sized enterprise in Zhejiang Province. The company has passed ISO9001 quality management system, ISO 14001 environmental management system, ISO 45001 occupational health and safety management system certification, ISO 27001 information security management system, and GB/T27922 after-sales service evaluation system (five stars); All products have obtained relevant certificates such as "3C" and "test reports", and have obtained 80 national authorized patents and 19 software copyrights.

Facing the future, under the historical opportunities and challenges of the country's "the Belt and Road Initiative", adhering to the corporate spirit of "integrity, innovation, responsibility, and transcendence", shouldering the corporate mission of "creating opportunities for employees, creating value for customers, and creating wealth for the society", continue to emancipate the mind, deepen enterprise reform, accelerate the pace of transformation and upgrading, and lead the overall situation with a scientific outlook on development to strive for the construction of more smart grids in China and the world.







About "DengGao"

The company employs first class production equipment and manufacturing engineering, pays attentions to new products developing and manpower training, now, she has owned a complete set of researching and manufacturing technology for products.

Insisting on the goal of high quality and high accuracy, Denggao people will try their best to provide customers all over the wold with the most excellent products, and work hard to share a larger marker in the competitive electrical field.









DGG®
DENGGAO ELECTRIC



Load Switch Production Line



35KV Isolation Switch Production Line



10KV Isolation Switch Assembly Line



ZW32 Vacuum Circuit Breaker Production Line



35KV Vacuum Circuit Breaker Production Line



Vacuum Circuit Breaker Laboratory



Crisis Control Material Torsion Testing Machine



Innovation



Beyond

Integrity



Responsibility



MARKET SERVICE

Denggao Electric CO.,Ltd. has set up sound marketing system, carries out development strategy "Brand marketing and Network marketing". Denggao products are sold wellnot only in China but also in Southeast Asia countries and regions, they are enjoyed andtrusted by the customers, as well as used by national major projects.

The company vigorously implements three strategies: technological innovation, capital business, internationalization expanding, in order to make Denggao turn to high-tech industry enterprise from traditional enterprise, create internationalization enterprisethat presents globalization operation.

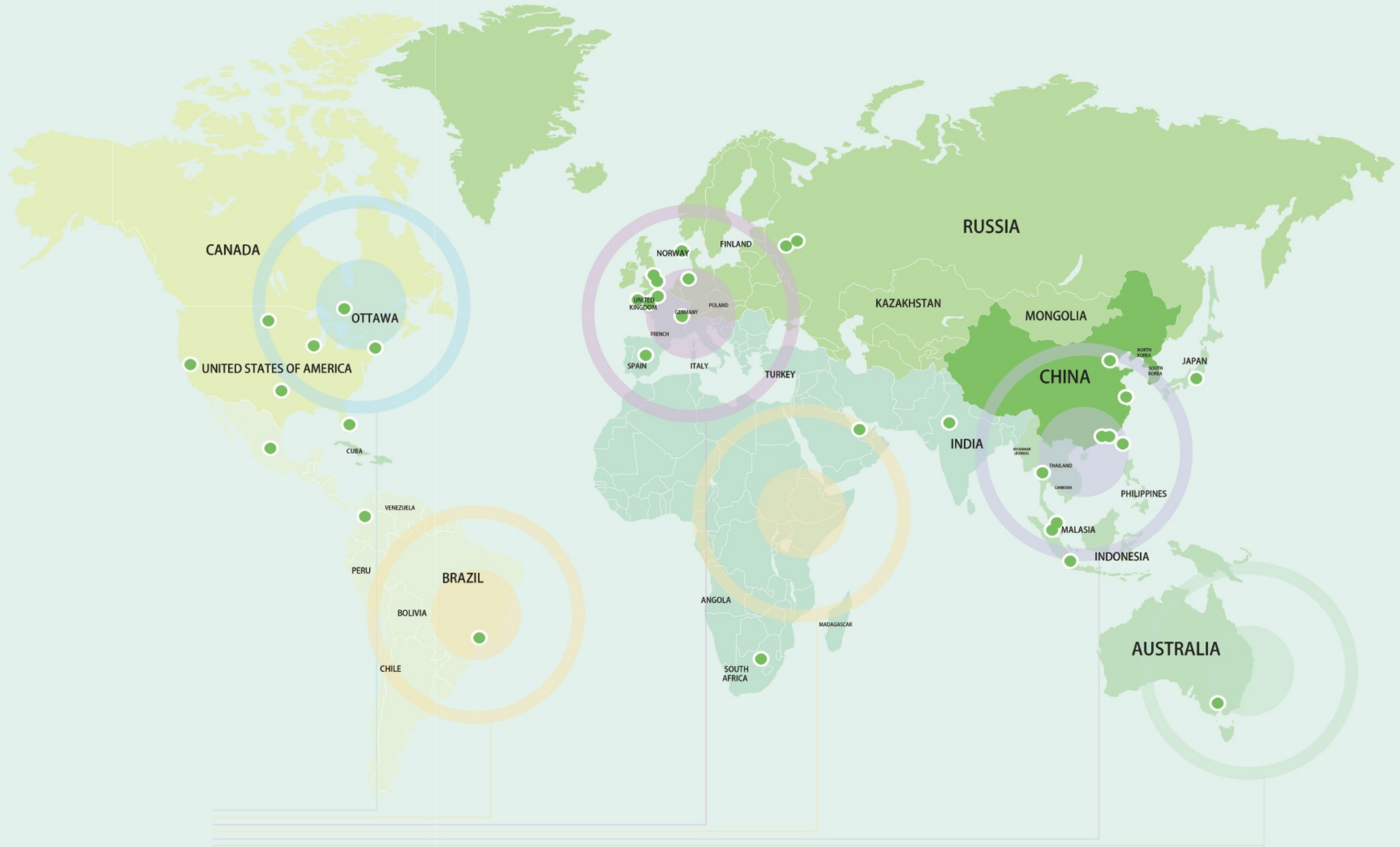










CONTENTS

A VACUUM CIRCUIT BREAKER SERIES

B ISOLATION SWITCH SERIES

C DROP TYPE FUSE SERIES

D LIGHTNING ARRESTER SERIES

VACUUM CIRCUIT BREAKER

DGG®
DENGGAO ELECTRIC

A VACUUM CIRCUIT BREAKER SERIES

01 LBS(PGS)-11/24/36kV Series Outdoor Post SF_6 Insulated Load Switch

05 LW3 Series Intelligent Outdoor High-voltage Column Mounted Sulfur SF_6 Circuit Breaker (Primary And Secondary Fusion)

09 ZW32-11/24/36kV Series Intelligent Outdoor High-voltage AC Vacuum Circuit Breaker

13 ZW32-24 Series Intelligent Outdoor High-voltage AC Vacuum Circuit Breaker

17 ZW32-12G□/T Series Intelligent Outdoor High-voltage AC Vacuum Circuit Breaker

21 LW38-40.5W Series Outdoor High-voltage AC SF_6 Circuit Breaker

25 ZW7-40.5 Series Outdoor High-voltage AC Vacuum Circuit Breaker

29 ZW20-12F Series Outdoor High-voltage Boundary Vacuum Circuit Breaker

33 ZJH-12 Series Outdoor High-voltage AC Floor Standing Metering Box

37 ZN63S(VS1$^+$)-12 Series Indoor High-voltage AC Vacuum Circuit Breaker

A

Vacuum circuit breaker series

Professional manufacturer
>>> you can count on >>>

DGG®
DENGGAO ELECTRIC

LBS(PGS)-11/24/36kV series

Outdoor post SF_6
insulated load switch



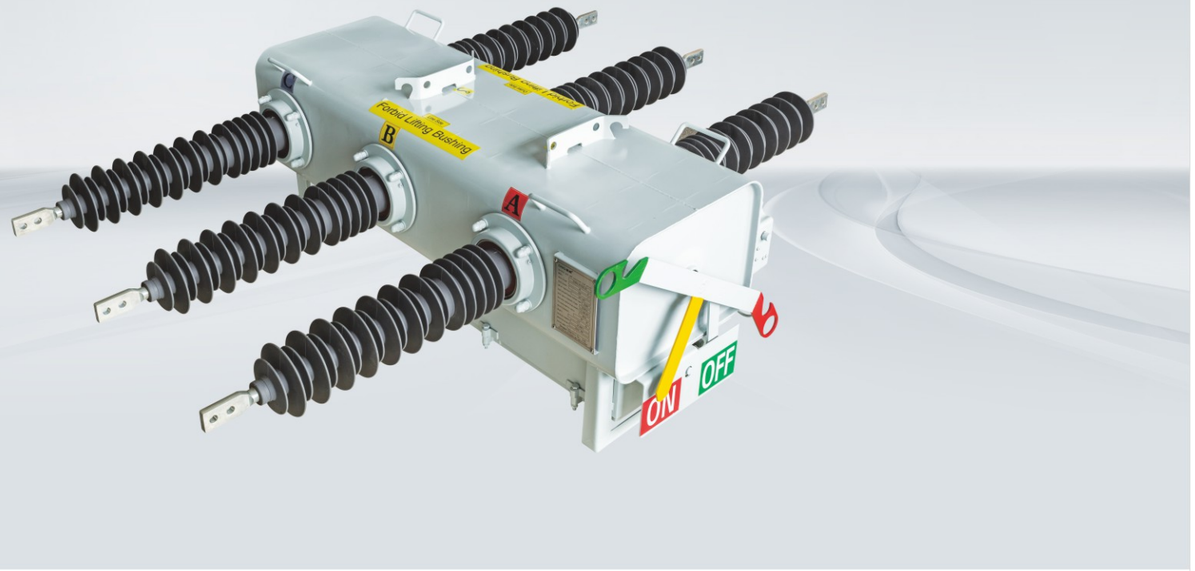

Overview

LBS(PGS) pole mounted load break switch is used for breaking rated voltage 12/24/36kV, rated current 630A, 1250A, 50/60Hz power distribution system, closing load current and over load current of power system, it could separate automatically track sections of power distribution which faults occur. The switch is matched with electronic controller which is with the latest technology. The switch has manual, motor, remote operation modes. The electronic controller would be installed inside the stainless steel box, so it could be used in various climate conditions. Besides that, the wire/wireless modem installed inside control box could achieve remote monitoring and controlling. It’s easy and convenient for installation the switch on pole, and that could reduce the execution cost.

DGG®
DENGGAO ELECTRIC

Model and meaning

LBS(PGS)	–	35	/	630	–	□	□
Product Name		Rated voltage (kV)		Rated current (A)		L: Cable outlet B: Lightning arrester	Operating mechanism M: Manual A: Electric Z: Automatic

Feature

- ◇ SF_6 gas−insulated: SF_6 gas is a kind of nontoxic, nonflammable and electrical insulating gas. It has the excellent characteristic of arc extinction.
- ◇ Drivepipe with large diversity: In addition to standard ceramic bushing, we can also provide a variety of programs, including rubber insulators in an epoxy bushing device.
- ◇ Visible open / closed status: It is easy to see the main contact position indicator which is color−coded just standing on the ground (Green−off; red−closed). The indicator is directly connected with the main contacts of the drive shaft assembly to ensure accurate display of contact states.
- ◇ Quick operation: Operating mechanism with spring energy to ensure a quick closing and opening operation (less than 100 milliseconds).
- ◇ Can realize remote control: It is equipped with electronic controller, fit for in situ operation as well as FTU interface console operation.
- ◇ Rugged switch: The switch is made of proven durable, corrosion−resistant materials (special used in warships 304L stainless steel plate) which ensures that there is a very long service life (30 years), and can be implement a series of operations. It has the ideal characteristics as a column equipment.
- ◇ Standard: Each switch before leaving the factory has been filled with SF_6 gas, sealed, and test according to IEC60265−1 (1988), GB40.504−1990 standard.

Environmental conditions

- ◇ Air temperature: max +50℃, min −40℃;
- ◇ Relative humidity: 110%;
- ◇ Altitude: ≤3000m;
- ◇ Wind pressure not exceeding: 700pa (equivalent to wind speed of 34m/s);
- ◇ Earthquake intensity: 8 levels;
- ◇ Installation site: No fire or explosion hazards, no chemical corrosion, and frequent severe vibration;
- ◇ Pollution level: Class III, Class IV.

Ordering Notice

- ◇ Please determine the product model, name, quantity, rated current, type of operating power supply, operating voltage, etc. as needed.
- ◇ According to user requirements, we can provide:
  a. Terminal or cable output;
  b. Ceramic sleeves and organic insulator sleeves;
  c. Special fixtures for busbar connection;
  d. Suspended installation bracket.

Main technical parameters

No.	Name		Unit	PGS-12	PGS-24	PGS-36
1	Rated voltage		kV	12	24	36
2	Rated current		A	630/1250	630/1250	630/1250
3	Rated frequency		Hz	50/60	50/60	50/60
4	Rated short-term withstand current		kA	20	20	20
5	Rated Active load breaking current		A	630/1250	630/1250	630/1250
6	Number of disconnections		Times	400	400	400
7	Short time closing current (peak)		kAp	50	50	50
8	Number of short-term closing current tests		Times	5	5	5
9	Cable charging breaking current		A	25	25	25
10	Line charging interruption current		A	1.5	1.5	2
11	Rated closed-loop breaking current		A	630/1250 22	630/1250 22	630/1250 22
12	1min power frequency withstand voltage of the main circuit	Interphase and ground (wet test)	kV	45	50	60
		Interphase and ground (dry test)		50	60	70
		Fracture surface (dry test)		50	60	80
13	Rated lightning impulse withstand voltage	Interphase and ground	kV	85	150	185
		Fracture surface		95	150	215
14	Internal arc test		kA	20/0.1	20/0.1	20/0.1
15	Arc extinguishing medium			SF_6 gas	SF_6 gas	SF_6 gas
16	Insulation medium			SF_6 gas	SF_6 gas	SF_6 gas
17	Creepage distance (ceramic)		mm	550	840	1055
18	Creepage distance (silicone)		mm	615	900	1250
19	Protection level			IP54	IP54	IP54
20	Closing/opening time		s	< 0.7	< 0.7	< 0.7
21	Mechanical operations (Guaranteed)		Times	10000	10000	10000
22	Operating temperature (Manual type)		℃	−25(40)~+70	−25(40)~+70	−25(40)~+70
23	Nominal pressure (kgf/cm G, at 20℃)			0.7	1.0	1.0
24	Bursting pressure (kgf/cm G)			4~6	4~6	4~6
25	Minimum gas pressure (kgf/cm G)			0.05	0	0
26	Leakage rate (cc/sec)			1.1×10^{-7}	1.1×10^{-7}	1.1×10^{-7}

A

Appearance and installation dimensions

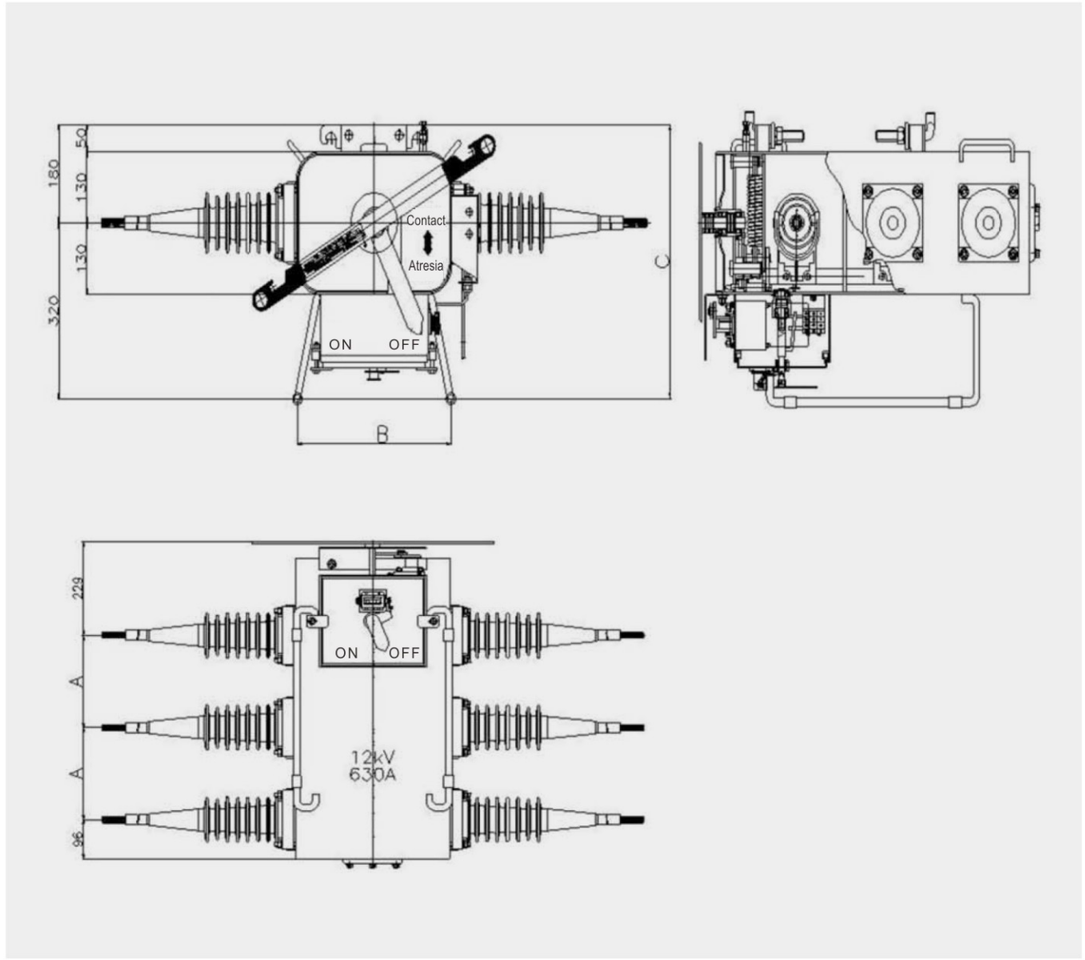

	Dimension (mm)			Installation dimension (mm) Length × Width	Packing size (mm) Length × Width × Hig	Creep distance of bushing (mm)
	A	B	C			
12kV	225	435	500	500 × 125(290)	1100 × 900 × 700	556
24kV	300	435	500	500 × 125(290)	1300 × 1100 × 700	840
35kV	350	435	500	700 × 125(290)	1400 × 1200 × 700	1250

A

Vacuum circuit breaker series

Professional manufacturer
>>> you can count on >>>

DGG®
DENGGAO ELECTRIC

LW3 series

Intelligent outdoor
high-voltage column mounted
sulfur SF_6 circuit breaker
(primary and secondary fusion)





Overview

The LW3-12/630-20 intelligent outdoor high-voltage SF_6 column mounted circuit breaker is a new generation product developed by our company in response to the new requirements of the State Grid for the integration of primary and secondary column mounted switches. The switch configuration fully meets the requirements of the State Grid for the integration of primary and secondary columns, making it easy for the State Grid to purchase and produce in bulk. The switch structure is compact, the layout is reasonable, the functions are complete, and all indicators meet the requirements of the first and second integration of the State Grid; Adopting a unified parameter protection CT, zero sequence CT, and zero sequence voltage sensor, it has the characteristics of wide measurement range, high measurement accuracy, and high reliability. The analog quantity is complete, making it easy to accurately determine various faults in the circuit. It is an ideal switch equipment for achieving "distribution network automation", with the ability to open and close load currents, overload currents, and short-circuit currents.

Environmental conditions

- ◇ Surrounding air temperature: −40℃~+50℃;
- ◇ Maximum daily temperature difference: ≤25℃;
- ◇ Relative humidity: ≤95%;
- ◇ Altitude not exceeding 3000m;
- ◇ Wind pressure not exceeding: 700pa (equivalent to wind speed of 34m/s);
- ◇ Earthquake intensity: 8 levels;
- ◇ Installation site: No fire or explosion hazards, no chemical corrosion, and frequent severe vibration;
- ◇ Pollution level: Class III, Class IV.

Feature

- ◇ It has significant advantages such as simple structure, good arc extinguishing and insulation performance, low operating power, high rated parameters, long electrical life and no maintenance cycle (20 years);
- ◇ The shell is made of stainless steel, which meets the corrosion resistance requirements for permanent use;
- ◇ An explosion-proof pressure relief device has been added to prevent the circuit breaker from bursting due to increased pressure caused by internal arc faults in the switch;
- ◇ Choosing insulated terminals for incoming and outgoing terminals can effectively avoid phase to phase flashover faults caused by external factors;
- ◇ Equipped with a low-pressure locking device, the gas pressure is in a dual control state, improving the reliability of switch operation;
- ◇ Changing the end sleeves of the incoming and outgoing lines to organic insulator type completely eliminates porcelain bottle breakage caused by external forces and lightning, as well as cracking caused by porcelain quality factors, greatly improving the reliability of circuit breaker operation;
- ◇ Equipped with a manual locking device, it effectively prevents misoperation during power outage operations;
- ◇ Increasing the inter phase distance of the switch to 250mm can greatly reduce inter phase flashover and short circuit faults;
- ◇ Improved the process of inlet and outlet conduit, effectively preventing phase to phase flashover faults caused by corona discharge during switch operation;
- ◇ A surge current controller can be installed to effectively shield the closing surge current, and it is convenient to set the overcurrent delay and overcurrent flow rate protection.
- ◇ Equipped with an automatic controller that can be manually operated. It can also be operated locally, remotely, or through the FTU interface for console operation.
- ◇ The use of this product not only reduces land area, reduces engineering costs, and eliminates fire hazards, but also improves its functional characteristics, anti-corrosion performance, and greatly enhances the operational reliability of the power system.

Ordering Notice

- ◇ Please determine the product model, name, quantity, rated current, breaking current, CT ratio and accuracy, as well as the category and operating power of the operating power supply as needed.
- ◇ According to user requirements, we can provide:
  a. Special fixtures for busbar connection;
  b. Circuit breaker suspension mounting bracket;
  c. Circuit breaker mounting bracket.

Main technical parameters

No.	Project		Unit	Technical parameter	
1	Rated voltage		kV	12	
2	Rated insulation level (when the circuit breaker is filled with SF_6 gas at 0.25MPa and 20 ℃)	Lightning impulse withstand voltage full wave	kV	75	
		1min power frequency withstand voltage		42	
		Rain withstand voltage test		34	
		Reverse phase impulse withstand voltage		85	
3	Insulation level at zero gauge pressure	1min power frequency withstand voltage	kV	30	
		1min reverse phase withstand voltage		30	
		Maximum phase voltage for five minutes		9	
4	Rated current		A	400、630	
5	Rated short-circuit breaking current (at 0.25MPa and 20 ℃)		kA	16	20
6	Phase to phase grounding reclosing breaking current		kA	14	17.4
7	Breaking current at zero gauge pressure		A	400、630	
8	Rated operating sequence	Type I		O-180s-CO-180s-CO	
		Type II		O-0.3s-CO-180s-CO	
9	Rated short-circuit making current (peak)		kA	40	50
10	Rated withstand current (peak)		kA	40	50
11	Rated short-term withstand current		kA	16	20
12	Rated short-circuit duration		s	4	
13	Rated cable charging breaking current		A	25	
14	Rated line charging breaking current		A	16	
15	Righteous closing speed		m/s	2.0±0.2	
16	Rigid velocity		m/s	3.6±0.2	
17	Distance between moving and stationary contacts		mm	37±2	
18	Total stroke of conductive rod		mm	58±2	
19	Conducting rod overtravel		mm	22±2	
20	Three phase synchronization of opening and closing		mm	≤2	
21	Resistance of each phase main circuit		μΩ	≤130	
22	Rated working pressure		MPa	0.35(20℃)	
23	Minimum working pressure		MPa	0.25(20℃)	
24	Annual air leakage rate		%	<0.05	
25	Mechanical stability operation		Times	10000	
26	SF_6 gas moisture content		PPM	≤150	
27	Weight		kg	150	

LW3 series
Intelligent outdoor high-voltage column mounted sulfur SF_6 circuit breaker (primary and secondary fusion)
DGG® DENGGAO ELECTRIC

A

Appearance and installation dimensions

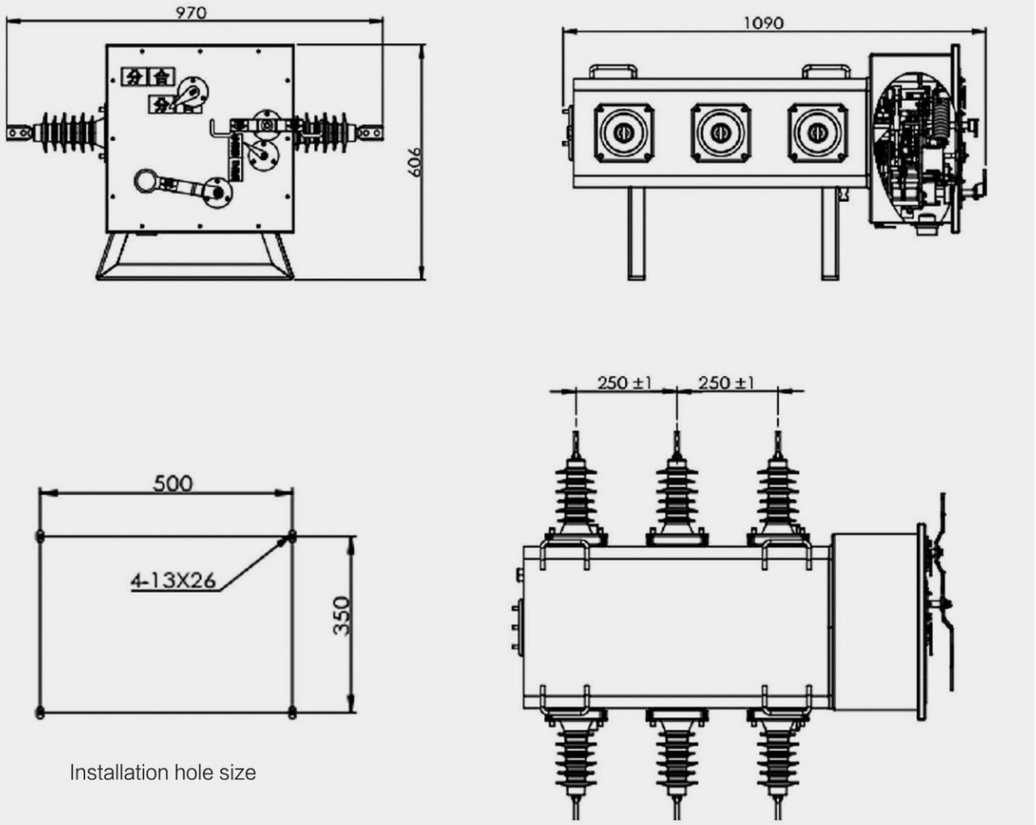

Installation hole size

A

Vacuum circuit breaker series

Professional manufacturer
>>> you can count on >>>

DGG®
DENGGAO ELECTRIC

ZW32-11/24/36kV series

Intelligent outdoor
high-voltage AC
vacuum circuit breaker



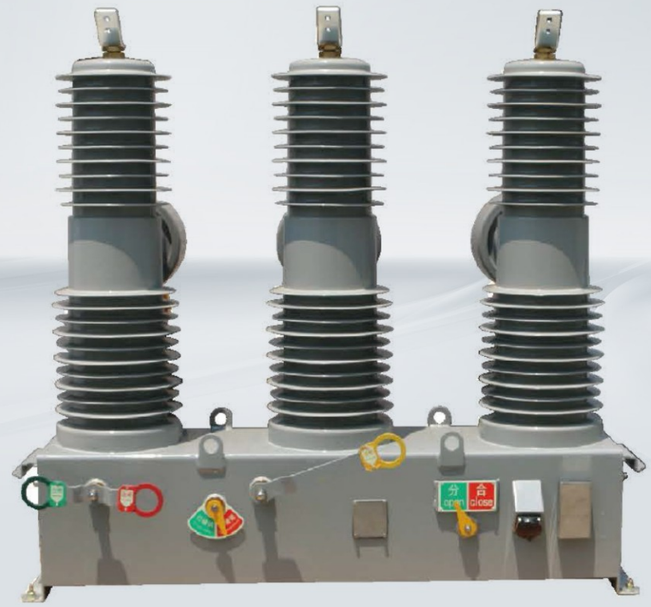



Overview

The ZW32-40.5 series intelligent outdoor high-voltage AC vacuum circuit breaker adopts a unique design of integrated fixed sealing pole and high reliability operating mechanism. This device is mainly used in medium voltage overhead power grids as a means of breaking and closing load currents, overload currents, and short-circuit currents.

DGG®
DENGGAO ELECTRIC

Model and meaning

Z	W	32 – 40.5	(G)	□ /	T	□ – □
Vacuum circuit breaker	Outdoors	Design No.	Rated voltage (kV)	G: With isolation switch None: Without isolation switch	Professional functions C: recloser H: Ring network F: boundary	Spring operating mechanism	Rated current (A)	Rated short-circuit breaking current (kA)

Environmental conditions

- ◇ Surrounding air temperature: −30℃~+60℃;
- ◇ Altitude: not exceeding 3000 meters;
- ◇ The wind speed shall not exceed 34m/s;
- ◇ Vibration or ground motion from the outside of switchgear and control equipment can be ignored;
- ◇ Pollution level: V level;
- ◇ Storage temperature: −40℃~+85℃.

Feature

- ◇ Extremely high reliability;
- ◇ Completely maintenance free throughout the entire lifespan;
- ◇ Has high mechanical and electrical lifespan;
- ◇ The whole machine has a small volume, light weight, and is easy to install.

Ordering Notice

- ◇ When placing an order, the model, name, quantity, and rated parameters of the circuit breaker should be specified;
- ◇ Indicate the number, ratio, capacity, and accuracy level of current transformers, and whether they have independent zero sequence;
- ◇ The type of mechanism and rated operating voltage of the electric mechanism should be indicated;
- ◇ Indicate the functions of the controller, such as whether it is equipped with a communication module, whether it comes with a power supply, and whether it comes with prepayment.

Main technical parameters

The main technical parameters of the circuit breaker are shown in the table

No.	Name	Unit	Data
1	Rated voltage	kV	40.5
2	Rated current	A	1250/1600
3	Rated frequency	Hz	50 or 60
4	1min power frequency withstand voltage (wet/dry)	kV	80 95/118
5	Lightning impulse withstand voltage (to ground/break)	kV	185/215
6	Rated short-circuit breaking current	kA	25/31.5
7	Rated short-circuit making current (peak)	kA	63/80
8	Rated short-term withstand current	kA	25/31.5
9	Rated bee withstand current	kA	63/80
10	Rated short-term duration	s	4
11	Rated operating cycle	Times	O-0.3s-CO-180s-CO
12	Rated short-circuit current breaking frequency	Times	30
13	Mechanical lifespan	Times	10000
14	Mechanism control voltage	V	AC/DC220 AC/DC110
15	1min power frequency withstand voltage of secondary circuit	kV	2

Mechanical characteristic adjustment parameters of circuit breakers

No.	Name	Unit	Data
1	Contact opening distance	mm	16±1
2	Contact overtravel	mm	3±0.5
3	Opening speed	m/s	1.4~1.8
4	Closing speed	m/s	0.4~0.8
5	Contact closing bounce time	ms	≤5
6	Center distance between phases	mm	460±2
7	Three phase opening and closing asynchrony	ms	≤2
8	Resistance of each phase conductive circuit	μΩ	<80
9	Closing time	ms	≤100
10	Opening time	ms	≤50
11	Weight	kg	270

A

Appearance and installation dimensions

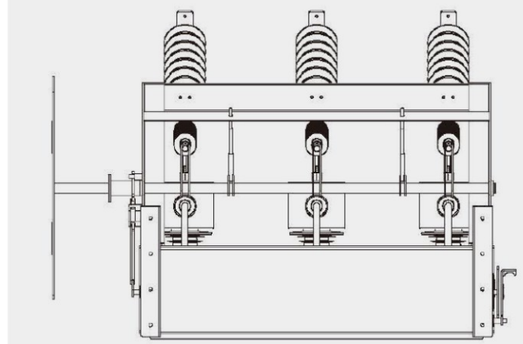

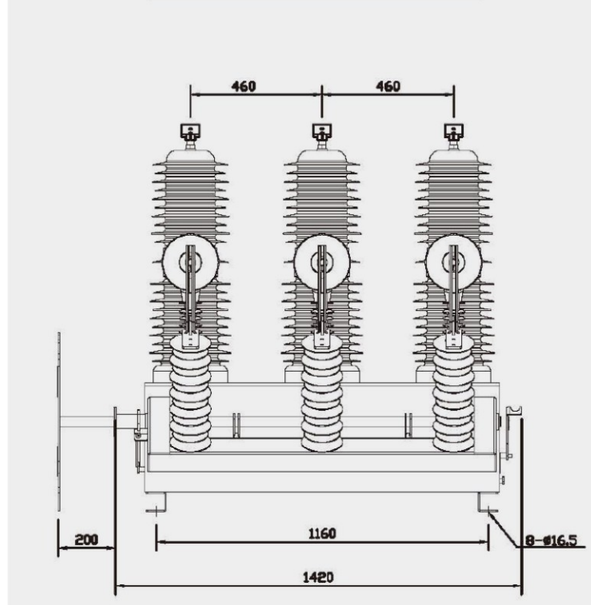

A

Vacuum circuit breaker series

Professional manufacturer
>>> you can count on >>>

DGG®
DENGGAO ELECTRIC

ZW32-24 series

Intelligent outdoor
high-voltage AC
vacuum circuit breaker



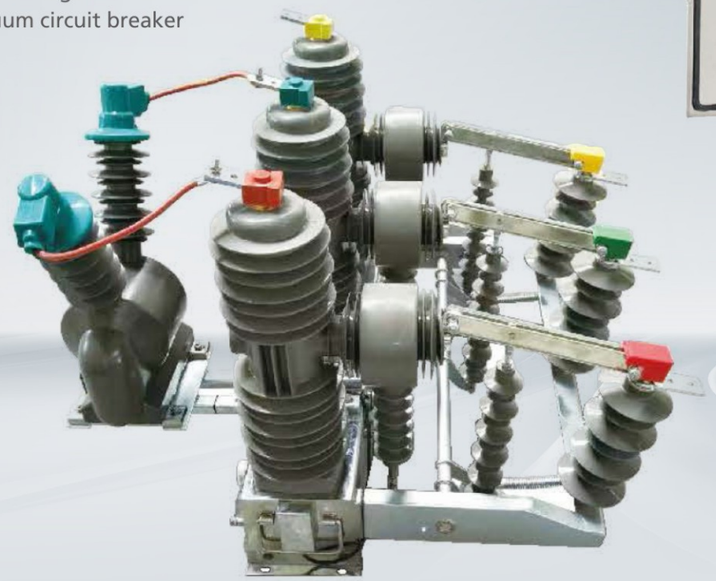



Overview

In recent years, with the continuous expansion of China's urban power grid and the rapid growth of electricity load. At the same time, targeting the characteristics of long power supply lines and high line losses in rural power grids. The original 10kV voltage level distribution is no longer able to meet power supply requirements, gradually exposing weaknesses such as excessive power supply distance, high line loss rate, and difficulty in meeting voltage quality requirements. The use of 20kV voltage level power supply has a series of advantages, such as increasing power supply capacity, ensuring voltage quality, reducing power grid energy loss, and saving construction costs of the power grid. Therefore, adopting a 20kV voltage distribution level power supply is an inevitable trend in development and is imperative.

The ZW32-24 series intelligent outdoor high-voltage AC vacuum circuit breaker is an outdoor switchgear with a three-phase AC 50Hz and a rated voltage of 24kV. It is suitable for opening and closing various types of loads and frequent operation situations, and is suitable for the construction and renovation of power equipment in urban power grids, rural power grids, mines, and railways. This product has no pollution to the surrounding environment and is a green and environmentally friendly product.

This circuit breaker complies with the requirements of GB/T 1984-2014 "High Voltage AC Circuit Breakers", DL/T 402-2007 "Technical Conditions for Ordering High Voltage AC Circuit Breakers", DL/T 403-2000 "Technical Conditions for Ordering 12kV~40.5kV High Voltage Vacuum Circuit Breakers" and other standards.

DGG®
DENGGAO ELECTRIC

Model and meaning

Z	W	32 - 24	(G)	□ /	T	□ - □
Vacuum circuit breaker	Outdoors	Design No.	Rated voltage (kV)	G: With isolation switch None: Without isolation switch	Professional functions C: recloser H: Ring network F: boundary	Spring operating mechanism	Rated current (A)	Rated short-circuit breaking current (kA)

Feature

- ◇ The shell is made of high-quality stainless steel material or ordinary steel plate, which is treated with Dacromet rust prevention technology and then sprayed with UV resistant varnish. The product has excellent environmental resistance such as anti-corrosion and salt spray resistance;
- ◇ The insulation part adopts a composite insulation material of epoxy resin and silicone rubber, with high insulation grade, strong anti pollution ability, ozone resistance, UV resistance, hydrophobicity, and high and low temperature resistance. There is no transformer oil or sulfur hexafluoride gas inside the box, which meets the requirements of oil-free transformation and environmental protection;
- ◇ The operating mechanism is a spring operated mechanism. There are two types: manual and electric. If necessary, remote control operation devices and surge avoidance devices can be installed. The required external power supply power should not exceed 70W, making it easy to equip with backup power. Design a unique buffer device with excellent performance, low rebound, and low noise.
- ◇ The arc extinguishing chamber adopts special stainless steel brazing technology, which does not require electroplating, has high welding quality, stability and reliability, and low air leakage rate. Special ceramic metallization formulas and advanced ceramic metallization processes are used in the production process to ensure the airtightness of the product, with a tensile strength greater than 130Mpa and complete one-time sealing.
- ◇ The current transformer is made of high-quality magnetic materials and composite insulation of epoxy resin and silicone rubber. It has the advantages of large capacity, high dynamic thermal stability, high accuracy level, maintenance free, and high reliability.
- ◇ According to user needs, it can be combined with corresponding controllers to form automatic reclosers and segmenters, making it an ideal equipment for achieving distribution network automation.

Environmental conditions

- ◇ Surrounding air temperature: upper limit +45℃, lower limit -40℃, daily average temperature change not exceeding 25 ℃;
- ◇ Relative humidity of air: daily average not exceeding 95%, monthly average not exceeding 90%;
- ◇ Altitude: not exceeding 1000m;
- ◇ Wind speed: not exceeding 34m/s;
- ◇ Wind pressure: 700Pa;
- ◇ Pollution level: not exceeding level IV specified in GB/T 5582-1993;
- ◇ Installation location: Outdoor, without flammable, explosive, chemical corrosion, or severe vibration.

Main technical parameters

Main technical parameters of vacuum circuit breaker body

No.	Project			Unit	Technical parameter	
1	Rated voltage			kV	24	
2	Rated current			A	630	1250
3	Rated frequency			Hz	50	
4	Rated insulation level	1min power frequency withstand voltage	Ground contact and fracture (wet test)	kV	50/64	
			Ground contact and fracture surface (dry test)		65/79	
			Secondary circuit to ground		2	
		Lightning impulse voltage	Ground contact and fracture		125/145	
5	Rated short-circuit breaking current			kA	20	25
6	Rated short-circuit making current (peak)				50	63
7	Rated short-term withstand current				20	25
8	Rated peak withstand current				50	63
9	Rated short-circuit breaking current breaking frequency			Times	30	
10	Rated short-circuit duration			s	4	
11	Rated operating voltage and rated voltage of auxiliary circuit			V	DC220、AC220	
12	Rated operating sequence				O-0.3s-CO-180s-CO	
13	Rated current of overcurrent release			A	5	
14	Mechanical lifespan			Times	10000	
15	Weight	Without isolation knife		kg	115	
		With isolation knife			138	

Mechanical characteristic adjustment parameters of circuit breakers

No.	Name	Unit	Data
1	Contact opening distance	mm	12±1
2	Overtravel		3±0.5
3	Center to center distance between phases		380±1.5
4	Three phase opening and closing asynchrony	ms	≤2
5	Contact closing bounce time		≤2
6	Closing time		25~45
7	Opening time		23~45
8	Average opening speed	m/s	1.0~1.4
9	Average closing speed		0.6~1.0
10	Main electrical circuit resistance	μΩ	≤100

A

Appearance and installation dimensions

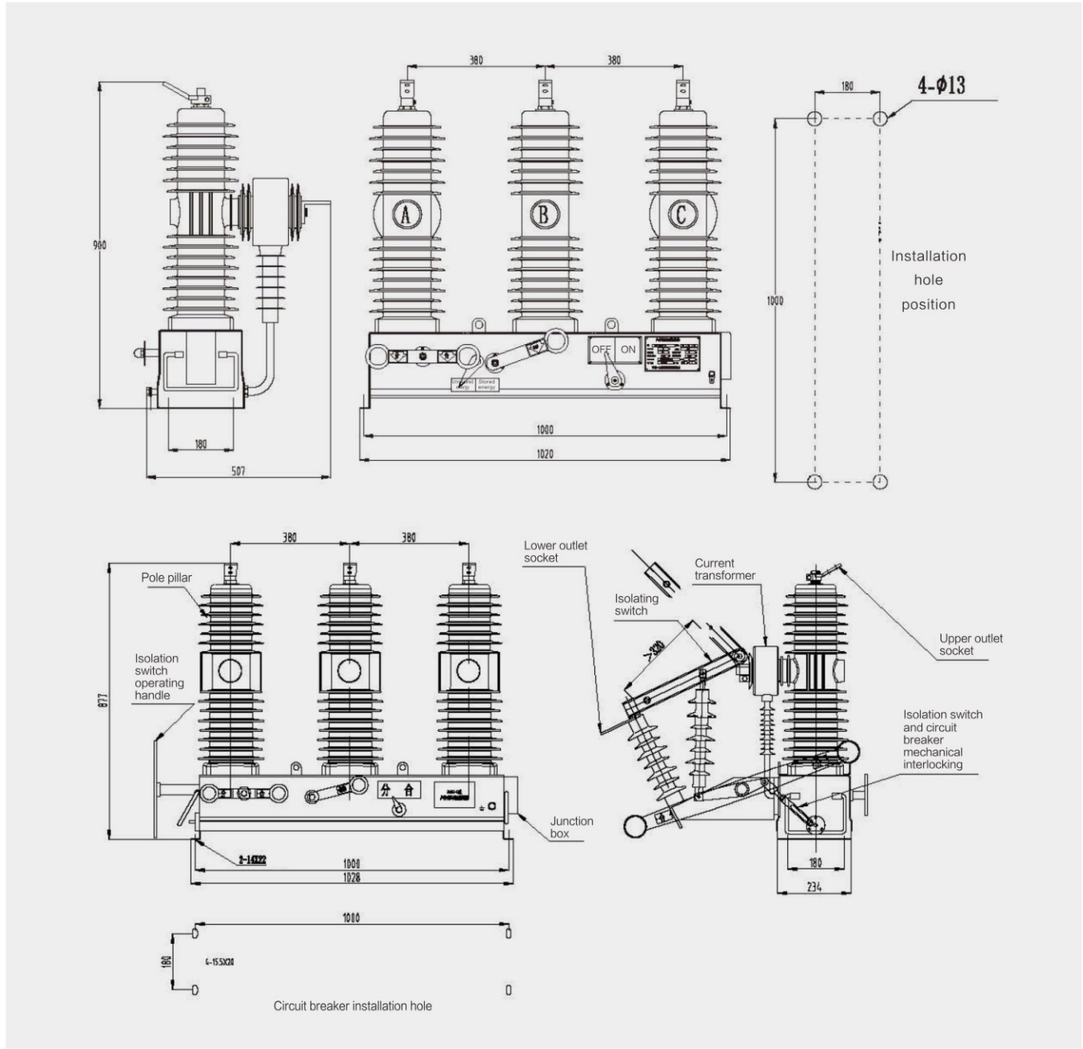

Ordering Notice

- ◇ When placing an order, the model, name, quantity, and rated parameters of the circuit breaker should be specified;
- ◇ Indicate the number, ratio, capacity, and accuracy level of current transformers, and whether they have independent zero sequence;
- ◇ The type of mechanism and rated operating voltage of the electric mechanism should be indicated;
- ◇ Indicate the functions of the controller, such as whether it is equipped with a communication module, whether it comes with a power supply, and whether it comes with prepayment.

A

Vacuum circuit breaker series

Professional manufacturer
>>> you can count on >>>

DGG®
DENGGAO ELECTRIC

ZW32-12G□/T series

Intelligent outdoor
high-voltage AC
vacuum circuit breaker



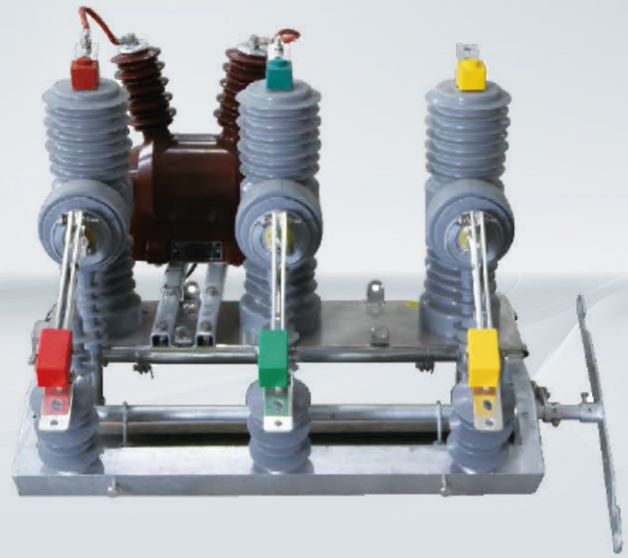



Overview

ZW32-12 (G) □/T series intelligent outdoor high-voltage AC vacuum circuit breaker (hereinafter referred to as "intelligent circuit breaker"). Outdoor high-voltage distribution switchgear with a rated voltage of 12kV and three-phase AC 50Hz is mainly used for breaking and closing load currents, overload currents, and short-circuit currents in power systems. It is suitable for protection and control in substations and distribution systems of industrial and mining enterprises, and can also be used in places that require frequent operation such as rural power grids.

The intelligent circuit breaker complies with technical standards such as GB/T 1984-2014 High Voltage AC Circuit Breakers, DL/T 402-2016 High Voltage AC Circuit Breakers, DL/T 403-2000 Technical Conditions for Ordering 12kV~40.5kV High Voltage Vacuum Circuit Breakers, and DL/T 721-2013 Remote Terminals for Distribution Automation Systems.

DGG®
DENGGAO ELECTRIC

Model and meaning

Z	W	32	–	12	(G)	□	/	T	□	–	□
Vacuum circuit breaker	Outdoors	Design No.		Rated voltage (kV)	With isolation switch	Professional functions F: Boundary C: Recloser H: Ring network		Spring operating mechanism	Rated current (A)		Rated short-circuit breaking current (kA)

Feature

- ◇ The overall structure is three-phase pillar type, and the sealing performance of the shell is good;
- ◇ The shell (box) is made of SUS304 non-magnetic stainless steel material, which has been precisely welded and polished by an imported argon arc welding machine. It has a beautiful appearance and will never rust;
- ◇ The vacuum arc extinguishing chamber is connected to the operating mechanism through an insulated pull rod, ensuring stable and reliable performance;
- ◇ The vacuum arc extinguishing chamber, main electrical circuit, and insulation support components are cast into an organic whole using epoxy resin through APG process, and sealed with silicone rubber, which has good anti condensation performance and mechanical strength;
- ◇ Adopting high-performance miniaturized spring operating mechanism, it has a simple structure, long mechanical life, and both electric and manual energy storage as well as opening and closing operation functions;
- ◇ Novel structure, small size, light weight, and easy installation;
- ◇ It can achieve functions such as three-stage protection, zero sequence grounding protection, reclosing, and remote communication.

Environmental conditions

- ◇ Altitude: not exceeding 1000m. If the altitude is higher than 1000m, the rated insulation level should be adjusted accordingly;
- ◇ Environmental temperature: upper limit +45℃, lower limit −40℃, maximum daily temperature difference of 25K;
- ◇ Humidity: Daily average relative humidity ≤95%, monthly average relative humidity ≤90%;
- ◇ Solar radiation intensity: ≥0.1W/cm^2;
- ◇ Wind speed: 34m/s;
- ◇ Wind pressure: 700Pa;
- ◇ Pollution level: e-level;
- ◇ Ice thickness: ≤10mm;
- ◇ Earthquake tolerance: horizontal acceleration of 0.3g, vertical acceleration of 0.2g.

Main technical parameters

No.	Project		Unit	Technical parameter
1	Rated frequency		Hz	50
2	Rated voltage		kV	12
3	Rated current		A	630/1250
4	Rated short-term power frequency withstand voltage	Interphase and ground (wet test)	kV/min	34/1
		Interphase and ground (dry test)		42/1
		Fracture surface (dry test)		48/1
		Secondary circuit to ground		2/1
5	Rated lightning impulse withstand voltage	Interphase and ground	kV	75
		Fracture surface		85
6	Rated short-circuit breaking current		kA	20/25
7	Rated short-circuit making current (peak)		kA	50/63
8	Rated short-term withstand current and duration		kA/s	(20/25)/4
9	Rated peak withstand current		kA	50/63
10	Rated short-circuit breaking current breaking frequency		Times	30
11	Rated operating voltage and rated voltage of auxiliary (control) circuit		V	AC/DC220、DC48、DC24
12	Main circuit resistance	Without isolation switch	μΩ	≤80
		With isolation switch		≤120
13	Mechanical lifespan		Times	10000

Note: If the altitude is higher than 1000m, the rated insulation level should be adjusted accordingly.

Ordering Notice

- ◇ Please indicate the product name and model;
- ◇ Please indicate the rated voltage, rated current, and rated short-circuit breaking current;
- ◇ Please indicate the number, ratio, accuracy level, and rated capacity of the current transformers (CTs) and power supply PTs provided, and whether an independent zero sequence CT is required;
- ◇ Please indicate the rated voltage of the operating mechanism and auxiliary (control) circuit;
- ◇ Please indicate the functions of the feeder terminal provided, such as whether it is equipped with a communication module, backup power supply, prepaid function, etc;
- ◇ Please indicate the order quantity and delivery time.

ZW32-12G□/T series
Intelligent outdoor high-voltage AC vacuum circuit breaker
DGG® DENGGAO ELECTRIC

Appearance and installation dimensions

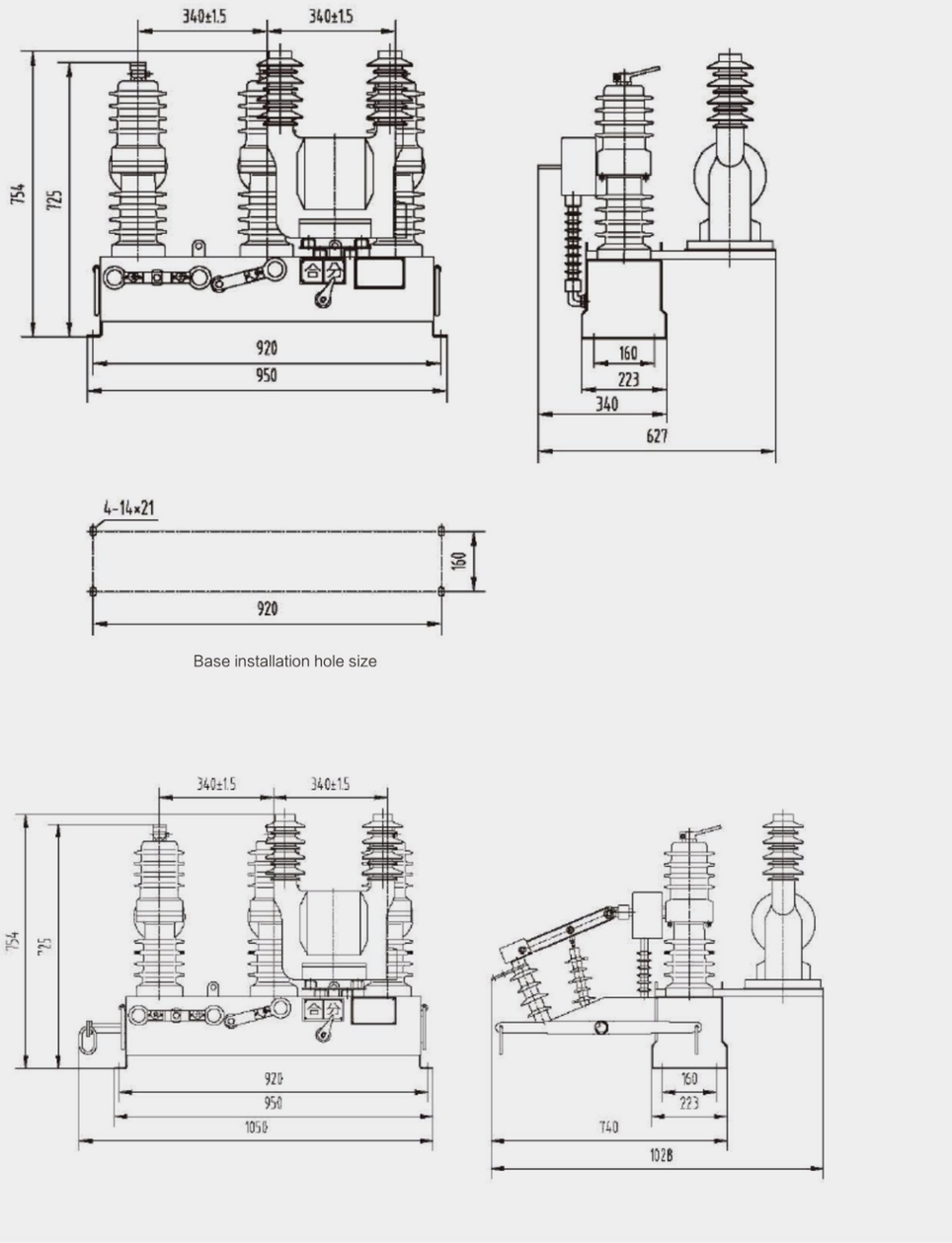

Base installation hole size

A

Vacuum circuit breaker series

Professional manufacturer
>>> you can count on >>>

DGG®
DENGGAO ELECTRIC

LW38-40.5W series

Outdoor high-voltage AC
SF_6 circuit breaker



Overview

LW38-40.5W outdoor AC high-voltage SF_6 circuit breaker (hereinafter referred to as "circuit breaker") is an outdoor high-voltage distribution switchgear with three-phase AC 50Hz and rated voltage of 40.5kV. It can be used to open and close rated current and fault current, switch capacitor banks, and transfer lines, especially suitable for frequent operation, and can also be used as a connecting circuit breaker.

The circuit breaker uses SF6 gas as the arc extinguishing and insulation medium, and is installed outdoors. It adopts an elevated ceramic column structure.

The circuit breaker complies with technical standards such as GB/T 1984-2014 High Voltage AC Circuit Breakers, DL/T 402-2016 High Voltage AC Circuit Breakers, and JB/T 9694-2008 High Voltage AC Sulfur Hexafluoride Circuit Breakers.

Model and meaning

L	W	38	–	40.5	(W)	/	T	□	–	□
Sulfur hexafluoride circuit breaker	Outdoors	Design No.		Rated voltage (kV)	Anti fouling type		Spring operating mechanism	Rated current (A)		Rated short-circuit breaking current (kA)

Feature

- ◇ Adopting SF_6 gas for arc extinguishing and insulation, with excellent insulation performance; Simple structure and long maintenance cycle;
- ◇ Strong breaking ability and long mechanical life;
- ◇ Either built-in or external current transformers, with high measurement accuracy;
- ◇ Built in intelligent wet temperature controller to ensure safe and reliable operation of circuit breakers in high-altitude areas;
- ◇ The overall sealing design of the shell has been improved to effectively prevent adverse effects of harsh weather such as sandstorms on the circuit breaker.

Environmental conditions

- ◇ Altitude: not exceeding 1000m. If the altitude is higher than 1000m, the rated insulation level should be adjusted accordingly;
- ◇ Environmental temperature: upper limit +45℃, lower limit −40℃, maximum daily temperature difference of 25K;
- ◇ Humidity: Daily average relative humidity ≤95%, monthly average relative humidity ≤90%;
- ◇ Solar radiation intensity: ≥0.1W/cm^2;
- ◇ Wind speed: 34m/s;
- ◇ Wind pressure: 700Pa;
- ◇ Pollution level: e-level;
- ◇ Ice thickness: ≤10mm;
- ◇ Earthquake tolerance: horizontal acceleration of 0.3g, vertical acceleration of 0.2g.

Ordering Notice

- ◇ Please indicate the product name and model;
- ◇ Please indicate the rated voltage, rated current, and rated short-circuit breaking current;
- ◇ Please indicate the rated working voltage of the operating mechanism and auxiliary (control) circuit;
- ◇ Please indicate the quantity, installation method (internal or external), transformation ratio, accuracy level, and rated capacity of current transformers;
- ◇ Please indicate other special requirements, such as high cold type, number of installation brackets and auxiliary contacts, etc;
- ◇ Please indicate the order quantity and delivery time.

Main technical parameters

No.	Project		Unit	Technical parameter
1	Rated frequency		Hz	50
2	Rated voltage		kV	40.5
3	Rated current		A	1250、1600、2000
4	Rated short-circuit breaking current		kA	31.5
5	Rated short-circuit making current			80
6	Rated short-term withstand current			31.5
7	Rated peak withstand current			80
8	Rated out of step breaking current			10
9	Rated short-circuit duration		s	4
10	Rated short-circuit breaking current breaking frequency		Times	10
11	Rated short-term power frequency withstand voltage	Interphase and ground (dry test)	kV/min	95/1
		Fracture surface (dry test)		118/1
		Interphase and ground (wet test)		80/1
		Auxiliary circuit to ground		2/1
12	Rated lightning impulse withstand voltage	Interphase and ground	kV	185
		Fracture surface		215
13	Rated operating voltage and rated voltage of auxiliary circuit		V	AC220、DC220
14	Main circuit resistance	Rated current 1600A and below	μ Ω	≤90
		Rated current greater than 1600A		≤40
15	Closing time	AC voltage	ms	≤100
		DC voltage		50~100
16	Opening time	AC voltage	ms	≤60
		DC voltage		30~65
17	Closing − opening time		ms	≥120(Running state)
18	Opening − closing time			≤50
19	Total breaking time			≤78
20	Rated operating sequence			O−0.8s−CO−180s−CO
21	Moving contact travel		mm	96±2.5
22	Contact opening distance			60±1.5
23	Closing buffer stroke			10±2
24	Interphase opening synchronicity		ms	≤3
25	Phase to phase closing synchronicity			≤3
26	Phase spacing		mm	725
27	SF_6 annual gas leakage rate		%	≤0.5
28	SF_6 gas moisture content (ppm, gauge pressure at 20℃)	Handover acceptance value	V/V	≤150
		Operating value		≤300
29	SF_6 gas rated pressure (gauge pressure at 20℃)		MPa	0.45
30	SF_6 gas replenishment pressure (gauge pressure at 20℃)			0.42
31	SF_6 gas blocking pressure (gauge pressure at 20℃)			0.4
32	Mechanical lifespan		Times	6000
33	SF_6 gas weight		kg	5
34	Weight	With CT	kg	800
		Without CT		1000

A

Appearance and installation dimensions

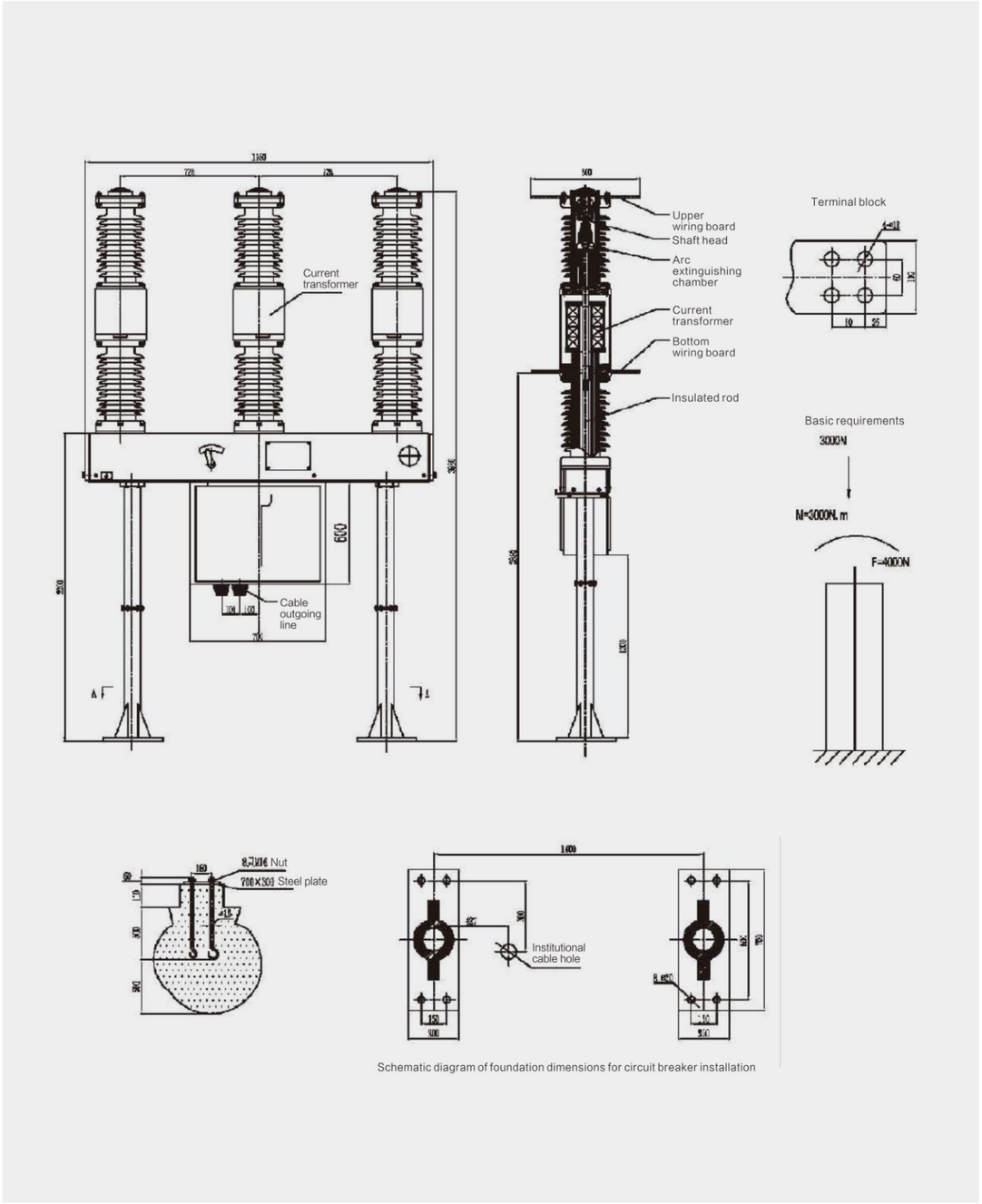

Schematic diagram of foundation dimensions for circuit breaker installation

A

Vacuum circuit breaker series

Professional manufacturer
>>> you can count on >>>

DGG®
DENGGAO ELECTRIC

ZW7-40.5 series

Outdoor high-voltage AC
vacuum circuit breaker



Overview

ZW7-40.5 series outdoor high-voltage AC vacuum circuit breaker (hereinafter referred to as "circuit breaker") is an outdoor high-voltage distribution switchgear with three-phase AC 50Hz and rated voltage of 40.5kV. It is mainly used for breaking and closing load current, overload current, and short-circuit current in power systems. Circuit breakers are suitable for control and protection in substations, industrial and mining enterprises, as well as urban and rural power grids, especially in places that require frequent operation and urban power distribution automation networks.

The circuit breaker complies with technical standards such as GB/T 1984-2014 High Voltage AC Circuit Breakers, DL/T 402-2016 High Voltage AC Circuit Breakers, and DL/T 403-2000 Technical Conditions for Ordering 12kK~40.5KV High Voltage Vacuum Circuit Breakers.

DGG®
DENGGAO ELECTRIC

Model and meaning

Z	W	7	-	40.5	(W)	/	T	□	-	□
Vacuum circuit breaker	Outdoors	Design No.		Rated voltage (kV)	Anti fouling type		Spring operating mechanism	Rated current (A)		Rated short-circuit breaking current (kA)

Environmental conditions

- ◇ Altitude: not exceeding 1000m. If the altitude is higher than 1000m, the rated insulation level should be adjusted accordingly;
- ◇ Environmental temperature: upper limit +45℃, lower limit −40℃, maximum daily temperature difference of 25K;
- ◇ Humidity: Daily average relative humidity ≤95%, monthly average relative humidity ≤90%;
- ◇ Solar radiation intensity: ≥0.1W/cm^2;
- ◇ Wind speed: 34m/s;
- ◇ Wind pressure: 700Pa;
- ◇ Pollution level: e-level;
- ◇ Ice thickness: ≤10mm;
- ◇ Earthquake tolerance: horizontal acceleration of 0.3g, vertical acceleration of 0.2g.

Feature

- ◇ Adopting vacuum arc extinguishing, with strong breaking ability and long mechanical life;
- ◇ Simple structure and long maintenance cycle;
- ◇ Good insulation performance, strong anti pollution ability, no fire and explosion hazards;
- ◇ It can be equipped with both built-in and external two or three-phase current transformers, with high measurement accuracy;
- ◇ Built in intelligent temperature and humidity controller to ensure normal and reliable operation of the product in high-altitude and cold areas;
- ◇ Improving the overall sealing design of the shell can effectively prevent adverse effects caused by harsh weather conditions such as sandstorms.

Main technical parameters

No.	Project		Unit	Technical parameter
1	Rated frequency		Hz	50
2	Rated voltage		kV	40.5
3	Rated current		A	1250、1600、2000
4	Rated short-term power frequency withstand voltage	Interphase and ground (dry test)	kV/min	95/1
		Fracture surface (dry test)		118/1
		Interphase and ground (wet test)		80/1
		Secondary circuit to ground		2/1
5	Rated lightning impulse withstand voltage	Interphase and ground	kV	185
		Fracture surface		215
6	Rated short-circuit breaking current		kA	31.5
7	Rated short-circuit making current		kA	80
8	Rated short-term withstand current and duration		kA/s	31.5/4
9	Rated peak withstand current		kA	80
10	Rated short-circuit breaking current breaking frequency		Times	20
11	Rated operating voltage and rated voltage of auxiliary circuit		V	AC/DC220、AC/DC110
12	Main circuit resistance (excluding CT)		μΩ	≤100
13	Mechanical lifespan		Times	10000

Note: If the altitude is higher than 1000m, the rated insulation level should be adjusted accordingly.

Ordering Notice

- ◇ Please indicate the product name and model;
- ◇ Please indicate the rated voltage, rated current, and rated short-circuit breaking current;
- ◇ Please indicate the rated working voltage of the operating mechanism and auxiliary (control) circuit;
- ◇ Please indicate the quantity, installation method (internal or external), transformation ratio, accuracy level, and rated capacity of current transformers;
- ◇ Please indicate other special requirements, such as high cold type, number of installation brackets and auxiliary contacts, etc;
- ◇ Please indicate the order quantity and delivery time.

Appearance and installation dimensions

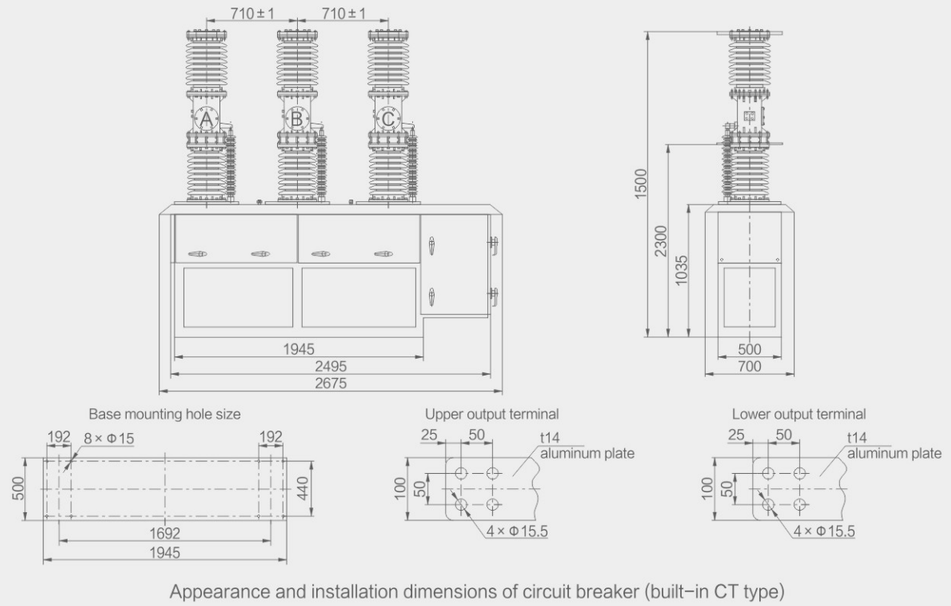

Appearance and installation dimensions of circuit breaker (built-in CT type)

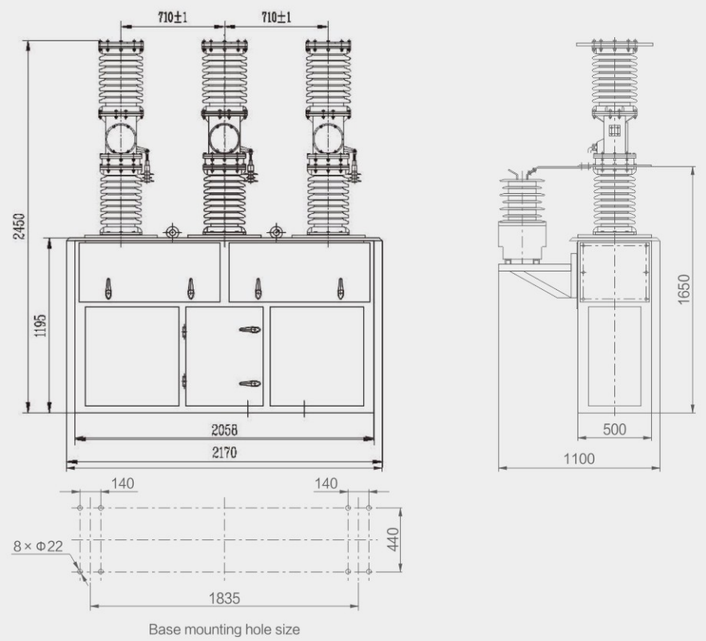

Appearance and installation dimensions of circuit breaker (external CT type)

A

Vacuum circuit breaker series

Professional manufacturer

>>> you can count on >>>

DGG®
DENGGAO ELECTRIC

ZW20-12F series

Outdoor high-voltage boundary vacuum circuit breaker

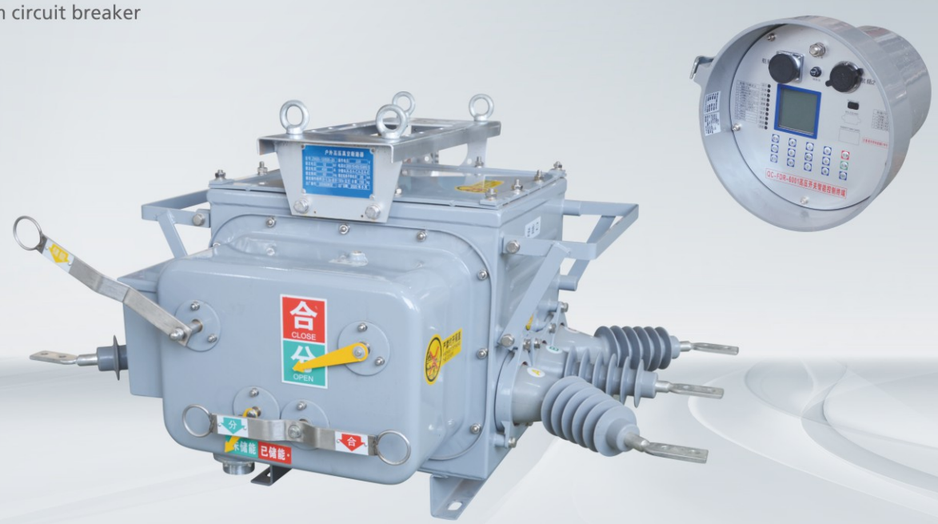

Overview

ZW20-12F series outdoor high-voltage AC boundary vacuum circuit breaker (hereinafter referred to as "boundary circuit breaker") is an outdoor high-voltage switchgear with three-phase AC 50Hz and rated voltage of 12kV. Mainly composed of vacuum circuit breaker body, distribution automation feeder terminal, voltage transformer, control cable, etc. The circuit breaker body is equipped with vacuum arc extinguishing chamber, current transformer, zero sequence current transformer and other components.

Boundary circuit breakers have remote management mode, protection control function, and communication function, which can reliably judge and detect the use of control and protection in substations, industrial and mining enterprises, urban and rural power grids within the boundary. They are particularly suitable for places that require frequent operation and urban milliampere level zero sequence current and phase to phase fault short circuit current, achieving automatic removal of single-phase grounding faults and phase to phase short circuit faults.

The boundary circuit breaker adopts vacuum arc extinguishing and SF6 gas insulation, and the box adopts advanced gas sealing, explosion-proof, and insulation structure technology from abroad. The overall sealing performance is excellent, and the spring operating mechanism adopts a miniaturized design, with excellent performance and much higher reliability than traditional spring operating mechanisms in China.

The boundary circuit breaker complies with technical standards such as GB/T1984-2014 High Voltage AC Circuit Breakers, DL/T 402-2016 High Voltage AC Circuit Breakers, DL/T 403-2000 Technical Conditions for Ordering 12kV~40.5kV High Voltage Vacuum Circuit Breakers, and DL/T721-2013 Remote Terminals for Distribution Automation Systems.

Model and meaning

Z	W	20	-	12		F	/	T		□	-	□
Vacuum circuit breaker	Outdoors	Design No.		Rated voltage (kV)		Boundary		Spring operating mechanism		Rated current (A)		Rated short-circuit breaking current (kA)

Feature

- ◇ Matching with smart grid: capable of achieving functions such as three-stage protection, zero sequence grounding protection, reclosing, and remote communication;
- ◇ Flexible and convenient operation: it can be used for electric energy storage, electric opening and closing, as well as manual energy storage and manual opening and closing, and can be operated at close or long distances;
- ◇ Low operating power and high reliability: The newly designed miniaturized spring operating mechanism reduces the operating power (about 30W) to the lowest level;
- ◇ Reliable sealing performance: SF_6 gas pressure is zero gauge pressure, and mature sealing structure technology is adopted to ensure reliable sealing performance and prevent leakage;
- ◇ Unique incoming and outgoing line method: using silicone rubber sleeves to ensure sufficient insulation distance between wiring terminals and excellent external insulation performance;
- ◇ Excellent safety performance: Explosion proof devices are installed on the top of the box, so even in the event of internal faults, no high-temperature gas or splashes will leak out;
- ◇ Flexible installation method: It can be installed using either pole mounted lifting or seated installation;
- ◇ Rated current is high, up to 1250A; Strong breaking ability, up to 25kA.

Environmental conditions

- ◇ Altitude: not exceeding 1000m. If the altitude is higher than 1000m, the rated insulation level should be adjusted accordingly;
- ◇ Environmental temperature: upper limit +45℃, lower limit -40℃, maximum daily temperature difference of 25K;
- ◇ Humidity: Daily average relative humidity ≤95%, monthly average relative humidity ≤90%;
- ◇ Solar radiation intensity: ≥0.1W/cm^2;
- ◇ Wind speed: 34m/s;
- ◇ Wind pressure: 700Pa;
- ◇ Pollution level: e-level;
- ◇ Ice thickness: ≤10mm;
- ◇ Earthquake tolerance: horizontal acceleration of 0.3g, vertical acceleration of 0.2g.

Main technical parameters

No.	Project		Unit	Technical parameter	
1	Rated frequency		Hz	50	
2	Rated voltage		kV	12	
3	Rated current		kV/min	630	1250
4	Rated short-term power frequency withstand voltage	Interphase and ground (wet test)	kV	34/1	
		Interphase and ground (dry test)		42/1	
		Fracture surface (dry test)		48/1	
		Secondary circuit to ground		2/1	
5	Rated lightning impulse withstand voltage	Interphase and ground		75	
		Fracture surface		85	
6	Rated short-circuit breaking current (effective value)		kA	20	25
7	Rated short-circuit making current (peak)		kA	50	63
8	Rated short-term withstand current and duration		kA/s	20/4	25/4
9	Rated peak withstand current		kA	50	63
10	Rated short-circuit breaking current breaking frequency		Times	30(E2级)	
11	Rated gauge pressure of SF_6 gas		MPa	0	
12	Main circuit resistance		μ Ω	⩽120	
13	Rated operating voltage and rated voltage of auxiliary (control) circuit		V	AC/DC220、DC48、DC24	
14	Mechanical lifespan		Times	10000(M2级)	

Note: If the altitude is higher than 1000m, the rated insulation level should be adjusted accordingly.

Ordering Notice

- ◇ Please indicate the product name and model;
- ◇ Please indicate the rated voltage, rated current, and rated short-circuit breaking current;
- ◇ Please indicate the number, ratio, accuracy level, and rated capacity of the current transformers (CTs) and power supply PTs provided, and whether an independent zero sequence CT is required;
- ◇ Please indicate the rated voltage of the operating mechanism and auxiliary (control) circuit;
- ◇ Please indicate the functions of the feeder terminal provided, such as whether it is equipped with a communication module, backup power supply, prepaid function, etc;
- ◇ Please indicate the order quantity and delivery time.

Appearance and installation dimensions

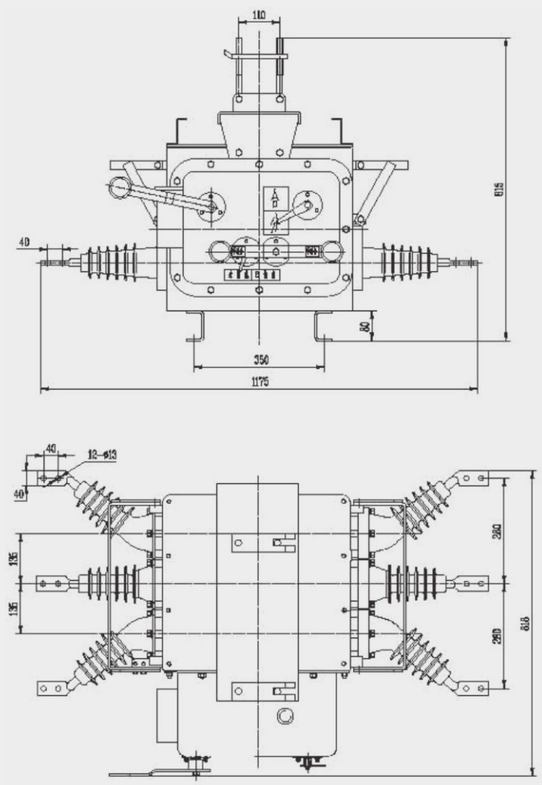

Installation dimension diagram of circuit breaker base

A

Vacuum circuit breaker series

Professional manufacturer

>>> you can count on >>>

DGG®
DENGGAO ELECTRIC

ZJH-12 series

Outdoor high-voltage AC
floor standing metering box



Overview

ZJH-12 series outdoor high-voltage AC floor standing metering box (hereinafter referred to as "floor standing metering box"). Suitable for measuring the electrical energy of high-voltage cable incoming users in AC three-phase 50Hz and rated voltage 10kV power systems, it can be installed on roadside lawns in parks, residential areas, and industrial and mining areas. It can directly open the door to check the meter bottom and perform circuit breaker opening and closing operations on site.

The floor standing metering box mainly consists of vacuum circuit breakers, cast type combination transformers, lightning arresters, live displays, and intelligent control devices. Its metering methods include three-phase and three-phase four wire systems, and can be equipped with zero sequence current transformers for grounding protection.

The floor standing measuring box complies with technical standards such as GB/T 1984-2014 High Voltage AC Circuit Breakers, DL/T 402-2016 High Voltage AC Circuit Breakers, DL/T 403-2000 Technical Conditions for Ordering 12kV~40.5kV High Voltage Vacuum Circuit Breakers, GB/T 17201-2007 Combination Transformers, and DL/T 721-2013 Remote Terminals for Distribution Automation Systems.

DGG®
DENGGAO ELECTRIC

Model and meaning

Z	J	H	-	12	(F)	□
Vacuum circuit breaker	Prepaid measurement	Floor standing (box) type		Rated voltage (kV)	Boundary	Measurement wiring method Y: Three phase four wire system V: Three phase three wire system

Feature

- ◇ Small footprint, low investment, and high cost-effectiveness;
- ◇ It has functions such as automatic power transmission, data processing, display, storage, alarm, and automatic power outage;
- ◇ Equipped with anti theft devices, it can reduce unnecessary energy loss for the power system;
- ◇ Equipped with prepayment function to avoid users defaulting on electricity bills;
- ◇ The box is a stainless steel floor standing structure, with a beautiful appearance and convenient installation.

Environmental conditions

- ◇ Altitude: not exceeding 1000m. If the altitude is higher than 1000m, the rated insulation level should be adjusted accordingly;
- ◇ Environmental temperature: upper limit +45℃, lower limit -40℃, maximum daily temperature difference of 25K;
- ◇ Humidity: Daily average relative humidity ≤95%, monthly average relative humidity ≤90%;
- ◇ Solar radiation intensity: ≥0.1W/cm^2;
- ◇ Wind speed: 34m/s;
- ◇ Wind pressure: 700Pa;
- ◇ Pollution level: e-level;
- ◇ Ice thickness: ≤10mm;
- ◇ Earthquake tolerance: horizontal acceleration of 0.3g, vertical acceleration of 0.2g.

Ordering Notice

- ◇ Please indicate the product name and model;
- ◇ Please indicate the rated voltage, rated current, and rated short-circuit breaking current;
- ◇ Please indicate the wiring method, current/voltage ratio, accuracy level, and rated capacity of the high-voltage metering box provided;
- ◇ Please indicate whether a prepaid energy meter is required and whether grounding protection is required;
- ◇ Please indicate the functions of the feeder terminal provided, such as whether it is equipped with a communication module, backup power supply, prepaid function, etc;
- ◇ Please indicate the order quantity and delivery time.

Main technical parameters

Main technical parameters of vacuum circuit breaker body

No.	Project		Unit	Technical parameter
1	Rated frequency		Hz	50
2	Rated voltage		kV	12
3	Rated current		A	630/1250
4	Rated short-term power frequency withstand voltage	Interphase and ground (dry test)	kV/min	34/1
		Fracture surface (dry test)		42/1
		Interphase and ground (wet test)		48/1
		Secondary circuit to ground		2/1
5	Rated lightning impulse withstand voltage	Interphase and ground	kV	75
		Fracture surface		85
6	Rated short-circuit breaking current		kA	20/25
7	Rated short-circuit making current (peak)		kA	50/63
8	Rated short-term withstand current and duration		kA/s	(20/25)/4
9	Rated peak withstand current		kA	50/63
10	Rated short-circuit breaking current breaking frequency		Times	30
11	Rated operating voltage and rated voltage of auxiliary (control) circuit		V	AC220、DC220
12	Mechanical lifespan		Times	10000

Note: If the altitude is higher than 1000m, the rated insulation level should be adjusted accordingly.

Main technical parameters of high-pressure metering section

No.	Project		Unit	Technical parameter
1	Rated frequency		Hz	50
2	Power factor (cosΦ)			0.8(lagging)
3	Rated primary voltage	Three phase three wire system	kV	10
		Three phase four wire system		10/ 3
4	Rated secondary voltage	Three phase three wire system	kV	0.1/0.22
		Three phase four wire system		(0.1/ 3)/0.22
5	Voltage transformer wiring method	Three phase three wire system		V-V
		Three phase four wire system		Y-Y
6	Rated primary current		A	5~600
7	Rated secondary current			5
8	Accuracy level of voltage transformers			0.2/3
9	Accurate level of current transformer			0.2S
10	Rated output of voltage transformer		VA	15/200
11	Maximum output of voltage transformer			500(Level 3)
12	Rated output of current transformer			10
13	Polarity			Depolarization
14	Rated short-term power frequency withstand voltage		kV/min	42/1
15	Rated lightning impulse withstand voltage		kV	75

A

Appearance and installation dimensions

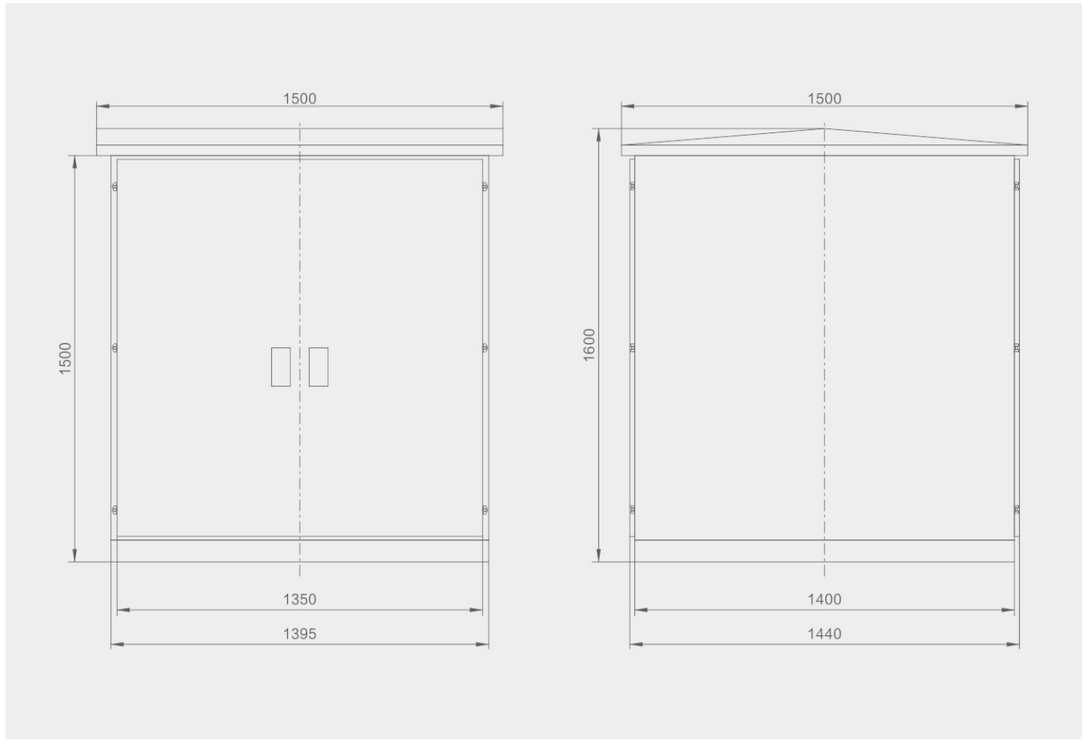

A

Vacuum circuit breaker series

Professional manufacturer
>>> you can count on >>>

DGG®
DENGGAO ELECTRIC

ZN63S(VS1+)-12 series

Indoor high-voltage AC
vacuum circuit breaker









Overview

The ZN63S (VS1+) −12 series indoor high−voltage AC vacuum circuit breaker (hereinafter referred to as the "circuit breaker") is an indoor high−voltage switchgear with a rated voltage of 12kV and three−phase AC 50Hz. It serves as a protection and control unit for power grid equipment and industrial and mining enterprise power equipment. Suitable for places that require frequent operation at rated operating current or multiple interruptions of short−circuit current.

The circuit breaker complies with technical standards such as GB/T 1984−2014 High Voltage AC Circuit Breakers and DL/T 402−2016 High Voltage AC Circuit Breakers.

DGG®
DENGGAO ELECTRIC

Feature

- ◇ **High lifespan:** Mechanical lifespan 30000 times, full capacity short−circuit current breaking times 50 times, can perform frequent operations or break short−circuit current multiple times within the working current range;
- ◇ **High reliability:** suitable for reclosing operations with various characteristics and can replace imported VD4;
- ◇ All working conditions: Adopting a vertical insulation cylinder to defend against various special environmental impacts;
- ◇ **Maintenance free:** Adopting solid insulation structure − integrated solid sealed pole;
- ◇ Fully functional and versatile: can be installed in a fixed or removable manner, and can also be installed on a frame for use;
- ◇ **Standardized design:** Good interchangeability and strong universality, especially suitable for KYN2B (GZS1) indoor mid mounted high−voltage switchgear.

Main technical parameters

No.	Project		Unit	Technical parameter		
1	Rated voltage		kV	12		
2	Rated insulation level	1min power frequency withstand voltage (effective value)		42		
		Lightning impulse withstand voltage (peak)		75		
3	Rated frequency		Times	50		
4	Rated current			630	1250	1600
				1250	1600	2000
					2000	2500
					2500	3150
5	Rated short−circuit breaking current		kA	20; 25	31.5	40
6	Rated short−circuit making current (peak)		kA	50; 63	80	100
7	Rated short−circuit breaking current frequency		Times	50		30
8	Rated short−circuit duration		s	4		
9	Mechanical lifespan		Times	10000		
10	Rated operating sequence			O−0.3s−CO−180s−CO		
11	Rated short−circuit breaking current breaking frequency		Times	30		
12	Rated closing voltage of operating mechanism		V	AC110 AC220 DC110 DC220		
13	Rated opening voltage of operating mechanism		V	AC110 AC220 DC110 DC220		
14	Contact opening distance		mm	11 ± 1		
15	Overtravel (compression length of contact spring)		mm	$3^{+1.0}_{-0.5}$		
16	Three pole closing and opening asynchrony		ms	≤2		
17	Contact closing bounce time		ms	≤2		
18	Average opening speed		m/s	0.9~1.3		
19	Average closing speed		m/s	0.4~0.8		
20	Opening time		ms	20~50		
21	Closing time		ms	30~70		
22	Main circuit resistance		μ Ω	≤50	≤35	
23	Accumulated thickness of wear allowed for dynamic and static contacts		mm	3		

DGG®
DENGGAO ELECTRIC

Environmental conditions

- ◇ Surrounding air temperature: upper limit +40℃, lower limit −15℃, daily average not exceeding +35℃;
- ◇ Relative humidity of the air: daily average not exceeding 95%, monthly average not exceeding 90%;
- ◇ Altitude: ≤2000m;
- ◇ Installation site: It should be a place without fire, explosion hazard, corrosive gas, and severe vibration.
- ◇ If users have special requirements, they should provide detailed explanations when placing an order.

Appearance and installation dimensions

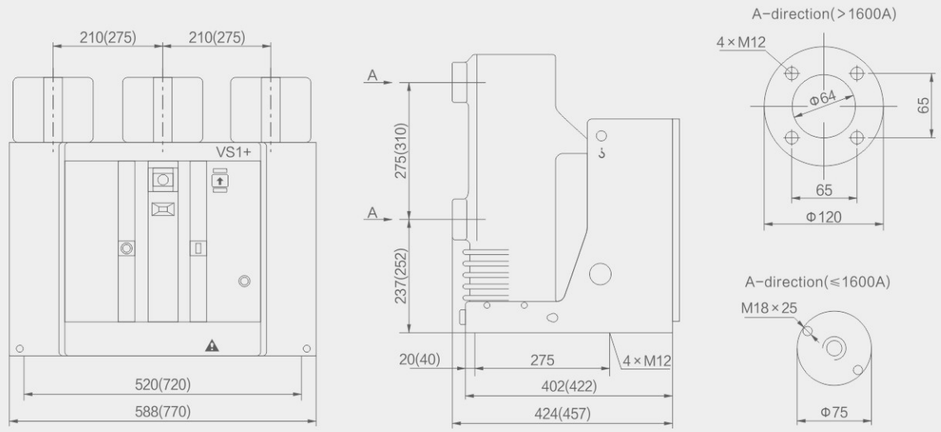

Note: The dimensions in parentheses are for specifications with a rated current greater than 1600A

ZN63S (VS1⁺) −12 series fixed external installation dimension diagram

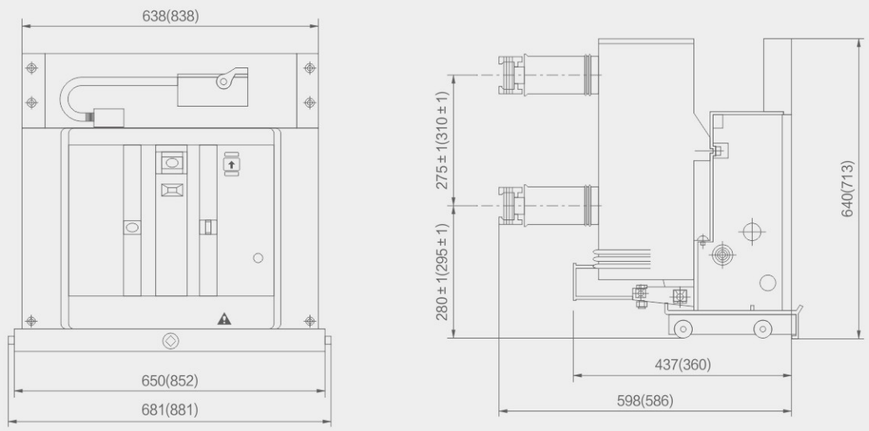

ZN63S (VS1⁺) −12 series handcart external installation dimension diagram

ISOLATION SWITCH

DGG®
DENGGAO ELECTRIC

B
ISOLATION SWITCH SERIES

41 (H)GW9-12 Series Outdoor High-voltage AC Isolation Switch
45 GW9-24 Series Outdoor High-voltage AC Single Machine Isolation Switch
47 DGW11-15 Series Outdoor High-voltage AC Isolation Switch
51 GW4A-12 Series Outdoor High-voltage AC Isolation Switch
55 GW4A-40.5W Series Outdoor High-voltage AC Isolation Switch
59 GN22-1.5 Series Indoor Single-phase DC Isolation Switch
61 RH-B Series Combination Electrical - Fuse Type Isolation Switch
65 GW5A-40.5 Series Outdoor High-voltage AC Isolation Switch
69 DGNPD Series Transformer Neutral Gap Grounding Protection Device
73 GW1-12 Series Outdoor High-voltage AC Isolation Switch

B

Isolation switch series

Professional manufacturer

>>> you can count on >>>

DGG®
DENGGAO ELECTRIC

(H)GW9-12 series

Outdoor high-voltage AC isolation switch

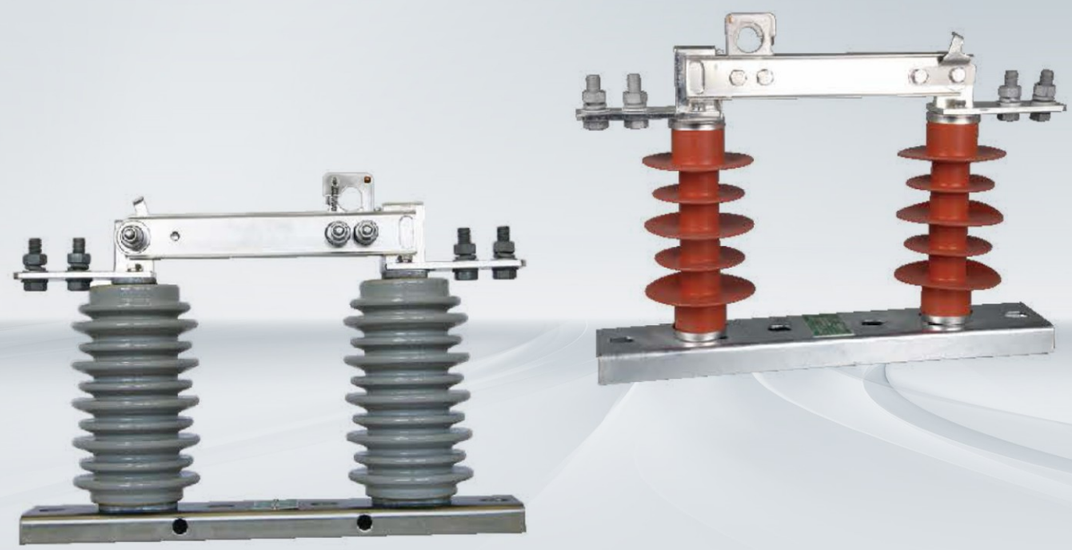

Overview

The (H)GW9-12 series outdoor high-voltage AC single-phase isolation switch (hereinafter referred to as "isolation switch") is used for connecting 10kV lines with voltage and without load, as well as for electrical isolation of high-voltage busbars, circuit breakers and other electrical equipment under maintenance from live high-voltage lines.

The isolation switch complies with technical standards such as GB/T 1985-2014 "High voltage AC isolation switches and grounding switches" and DL/T 486-2010 "High voltage AC isolation switches and grounding switches".

Model and meaning

(H)	G	W	9	-	12	G	W	/	□	-	□
Composite insulation	Isolation switch	Outdoors	Design No.		Rated voltage (kV)	Improved type	Anti fouling type		Rated current (A)		Rated short-term withstand current (kA)

Environmental conditions

- Altitude: not exceeding 1000m. If the altitude is higher than 1000m, the rated insulation level should be adjusted accordingly;
- Environmental temperature: upper limit +45℃, lower limit −40℃, hottest month average temperature of 30℃, maximum daily temperature difference of 25K;
- Solar radiation intensity (outdoor): 0.1W/cm^2;
- Wind speed/pressure (outdoor): 34m/s (700Pa);
- Pollution level: e-level;
- Ice thickness: ≤20mm;
- Humidity: Daily average relative humidity ≤95%, monthly average relative humidity ≤90%;
- Earthquake tolerance: horizontal acceleration of 0.3m/s^2. vertical acceleration of 0.15m/s^2;
- Safety factor: sine resonance three cycle wave, safety factor above 1.67.

Feature

- Significant improvements have been made in product structure and corrosion resistance. After closing, the conductive plate has a self-locking function. When opening, the hook and loop are pulled to automatically unlock its installation base, conductive spring and spring cover, lock plate, lock hook and lock hook spring of the self-locking device, and standard parts are all made of SUS304 non-magnetic stainless steel, with a bright surface treatment and strong corrosion resistance;
- The conductive plate is equipped with a stop pin, and the maximum rotation opening is not less than 160 degrees. The contact of the conductive plate is equipped with a stainless steel clip spring, which has been passivated and riveted for installation, with high elasticity and maintaining contact pressure;
- The main electrical circuit components are made of T2 purple copper, and the static contacts and wiring boards are made of integral profiles, completely solving the problem of poor contact caused by welding of static contacts and wiring boards in the past;
- The surface of the main circuit conductive components is fully coated with silver, with a thickness of no less than 20μm. The surface coating is bright, long-lasting, and has strong oxidation resistance using closed oxidation treatment technology. The conductivity is excellent, and the circuit resistance is less than 80μΩ;
- The wiring board is a double hole structure, made of hard copper alloy material, and the outer layer is coated with silver technology;
- Adopting an external pressure contact spring, the conductive contact has a surface contact "arc" structure, high uniform pressure, and self-cleaning. The contact pressure remains unchanged for a long time, ensuring the safe and reliable long-term operation of the product;
- The insulators are made of high-strength porcelain or silicone rubber composite materials, with a large creep distance design, meeting the e-level pollution prevention requirements, and have good anti pollution ability and operating characteristics;
- The minimum ground distance for charged parts is greater than 200mm, and the distance between fracture surfaces is greater than 230mm, making it suitable for use in high-altitude areas.

Main technical parameters

No.	Project		Unit	Technical parameter
1	Rated frequency		Hz	50
2	Rated voltage		kV	12
3	Rated current		A	630(1250)
4	Rated short-term withstand current and duration		kA/s	20(25)/4
5	Rated peak withstand current		kA	50(63)
6	Rated short-term power frequency withstand voltage	Interphase and ground (dry test)	kV/min	42/1
		Fracture surface (dry test)		48/1
		Interphase and ground (wet test)		30/1
		Fracture surface (wet test)		36/1
7	Rated lightning impulse withstand voltage	Interphase and ground	kV	75
		Fracture surface		85
8	Loop resistance		μ Ω	≤80
9	Mechanical lifespan		Times	3000
10	Pollution level			e-Level
11	Creepage distance		mm	≥372

Note: If the altitude is higher than 1000m, the rated insulation level should be adjusted accordingly.

Ordering Notice

- ◇ Please indicate the product name and model;
- ◇ Please indicate the rated voltage, rated current, and rated short-term withstand current;
- ◇ Please indicate other special requirements, such as installing brackets, etc;
- ◇ Please indicate the order quantity and delivery time.

Appearance and installation dimensions

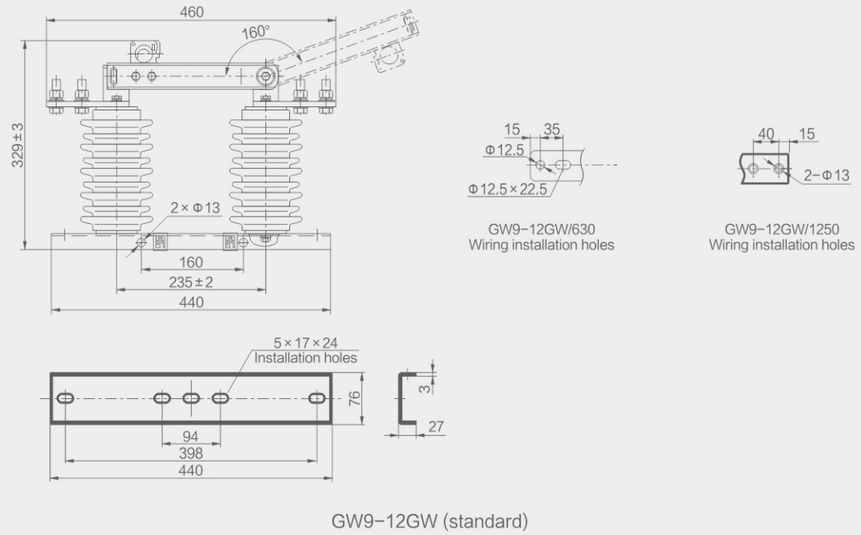

GW9-12GW (standard)

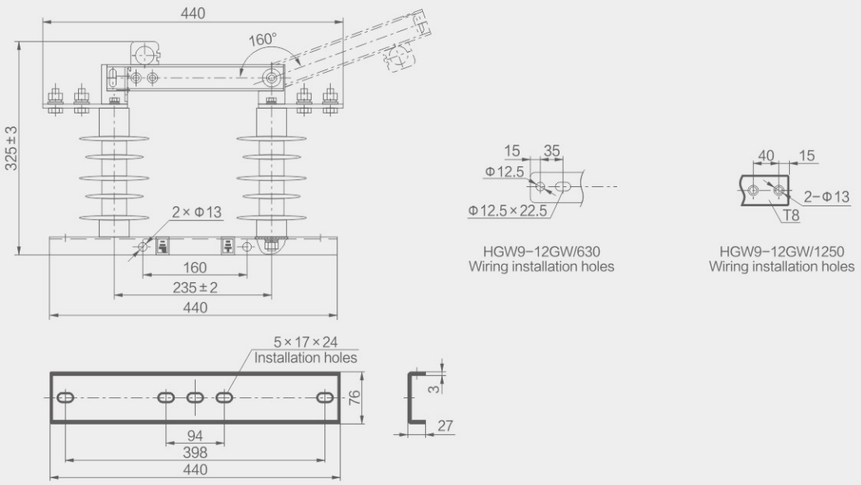

HGW9-12GW (standard)

B

Isolation switch series

Professional manufacturer
>>> you can count on >>>

DGG®
DENGGAO ELECTRIC

GW9-24 series

Outdoor high-voltage AC
single machine isolation switch



Overview

The GW9−24 series outdoor high−voltage AC single pole isolation switch (hereinafter referred to as "isolation switch") is an outdoor high−voltage distribution equipment with a rated voltage of 24kV and three−phase AC 50Hz. It is suitable for cutting off and closing single−phase or three−phase circuits without load and voltage on 20kV high−voltage transmission lines.

The rated current of the isolation switch is 200A, 400A, 600A, and 1000A.

The isolation switch consists of a base, porcelain pillar insulators, conductive parts, and mechanism parts. The use of a knife gate structure to open and close electrical circuits is achieved. Each phase switch blade is composed of two conductive blades, with compression springs installed on both sides of the blades. Adjusting the height of the springs can obtain the contact pressure required for the switch blade. When the isolation switch is opened and closed, the insulation hook rod operating mechanism can perform the opening and closing movement. The isolation switch is equipped with a self−locking device.

Isolation switches are generally used in conjunction with transformers on three−phase line systems. It has a simple structure, beautiful appearance, and is easy to operate and maintain.

The isolation switch complies with technical standards such as GB/T 1985−2004 "High voltage AC isolation switches and grounding switches" and DL/T 486−2000 "Technical conditions for ordering AC high voltage isolation switches and grounding switches".

Model and meaning

G	W	9	−	24	/	□	−	□
Isolation switch	Outdoors	Design No.		Rated voltage (kV)		Rated current (A)		Rated short−term withstand current (kA)

DGG®
DENGGAO ELECTRIC

Environmental conditions

- Surrounding air temperature: upper limit +40℃, lower limit −30℃;
- Relative humidity of air: daily average not exceeding 95%, monthly average not exceeding 90%;
- Altitude: not exceeding 3000m;
- Wind speed: not exceeding 34m/s(wind pressure 700Pa);
- Pollution level: not exceeding level III specified in GB/T/T 5582−1993;
- Installation site: Outdoor, there should be no gases, vapors, chemical deposits, salt mist, dust, dirt, flammable, explosive, or corrosive media that seriously affect the insulation and conductivity of the isolation switch.

Main technical parameters

No.	Project	Unit	Technical parameter	
1	Rated voltage	kV	24	
2	Rated frequency	Hz	50	
3	Rated current	A	400	630
4	Rated short−term withstand current	kA	16	20
5	Rated peak withstand current	kA	40	50
6	Duration of rated short−term withstand current	s	4	
7	1min power frequency withstand voltage	kV	65/79(fracture surface)	
8	Rated lightning impulse withstand voltage	kV	125/145(fracture surface)	
9	Mechanical lifespan	Times	2000	

Note: If the altitude is higher than 1000m, the rated insulation level should be adjusted accordingly.

Appearance and installation dimensions

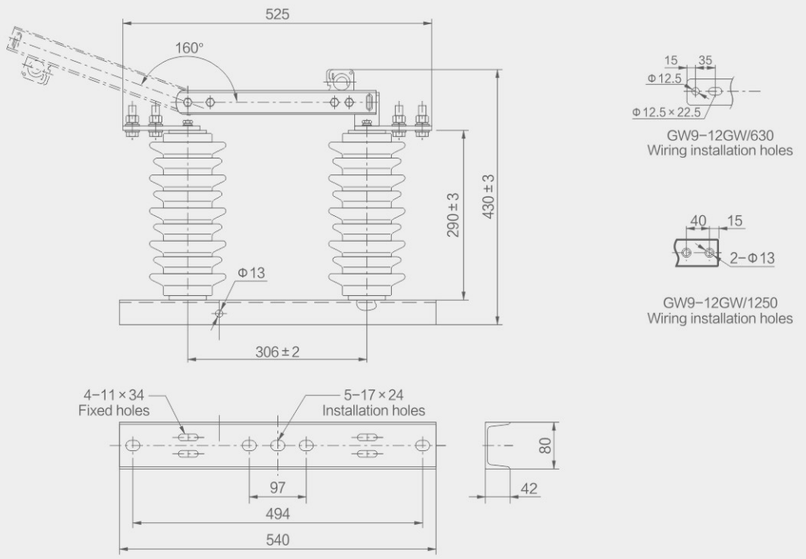

B

Isolation switch series

Professional manufacturer

>>> you can count on >>>

DGG®
DENGGAO ELECTRIC

DGW11-15 series

Outdoor high-voltage AC isolation switch



Overview

The DGW11-15 series outdoor high-voltage AC isolation switch (hereinafter referred to as "isolation switch") is a single-phase hook rod operated isolation switch with a self-locking device on the switch blade. The isolation switch is suitable for isolating 12kV and 15kV overhead lines. Performing opening and closing operations without load, widely used in conjunction with circuit breakers or load switches, and providing a safe visible break for the circuit.

The isolation switch complies with technical standards such as GB/T 1985-2014 "High voltage AC isolation switches and grounding switches" and DL/T 486-2010 "High voltage AC isolation switches and grounding switches".

Model and meaning

D	G	W	11	-	15	/	□	-	□
Denggao Electric	Isolation switch	Outdoors	Design No.		Rated voltage (kV)		Rated current (A)		Rated short-term withstand current (kA)

Environmental conditions

- Altitude: not exceeding 1000m. If the altitude is higher than 1000m, the rated insulation level should be adjusted accordingly;
- Environmental temperature: upper limit +45℃, lower limit −40℃, hottest month average temperature of 30℃, maximum daily temperature difference of 25K;
- Solar radiation intensity (outdoor): 0.1W/cm^2;
- Wind speed/pressure (outdoor): 34m/s (700Pa);
- Pollution level: e-level;
- Ice thickness: ≤20mm;
- Humidity: Daily average relative humidity ≤95%, monthly average relative humidity ≤90%;
- Earthquake tolerance: horizontal acceleration of 0.3m/s^2. vertical acceleration of 0.15m/s^2;
- Safety factor: sine resonance three cycle wave, safety factor above 1.67.

Feature

- Simple structure, easy installation and use;
- The base is made of high-strength steel plate or SUS304 stainless steel plate treated with hot-dip galvanizing anti-corrosion process, ensuring reliable operation and anti-corrosion performance; Using square neck bolts in conjunction with square holes on the bottom plate for easy actual installation;
- The pillar insulator adopts high-strength outdoor epoxy resin solid casting, with a large climbing distance design, which not only reduces the weight of the product to the greatest extent, but also has good hydrophobic performance;
- The main circuit adopts a symmetrical double static contact design, which enables the product to have dual circuit conductivity. At the same time, the rotating part is tightened in a non main circuit position, ensuring a low temperature rise under normal operation. All components of the main circuit are treated with silver plating technology, effectively enhancing the conductivity of the product;
- The wiring terminals use standard double hole copper bars for wiring, and the size and spacing of the copper bar holes comply with the general practice in China, making it easy for users to install;
- There is no knife switch limiting device to enhance the stability of knife switch operation, and there are two limiting methods: 90° or 160° . The default factory setting is 160° . If a 90° limit is required or no limit is required, it can be adjusted by itself;
- The lever design for operating the pull ring and rotating lock pin makes it easy to open and improve the ice breaking ability.

Main technical parameters

No.	Project		Unit	Technical parameter
1	Rated frequency		Hz	50
2	Rated voltage		kV	12
3	Rated current		A	630(1250)
4	Rated short-term withstand current and duration		kA/s	20(25)/4
5	Rated peak withstand current		kA	50(63)
6	Rated short-term power frequency withstand voltage	Interphase and ground (dry test)	kV/min	42/1
		Fracture surface (dry test)		48/1
		Interphase and ground (wet test)		30/1
		Fracture surface (wet test)		36/1
7	Rated lightning impulse withstand voltage	Interphase and ground	kV	75
		Fracture surface		85
8	Loop resistance		μ Ω	≤80
9	Mechanical lifespan		Times	3000
10	Pollution level			e-Level
11	Creepage distance		mm	≥372

Note: If the altitude is higher than 1000m, the rated insulation level should be adjusted accordingly.

Ordering Notice

- ◇ Please indicate the product name and model;
- ◇ Please indicate the rated voltage, rated current, and rated short-term withstand current;
- ◇ Please indicate other special requirements, such as installing brackets, etc;
- ◇ Please indicate the order quantity and delivery time.

DGW11-15 series
Outdoor high-voltage AC isolation switch
DGG® DENGGAO ELECTRIC

Appearance and installation dimensions

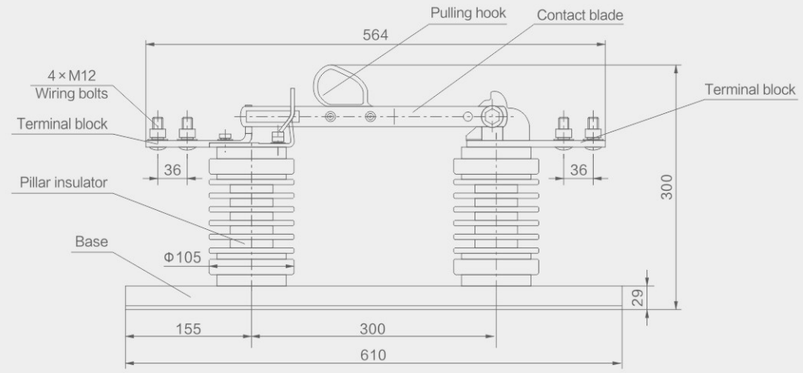

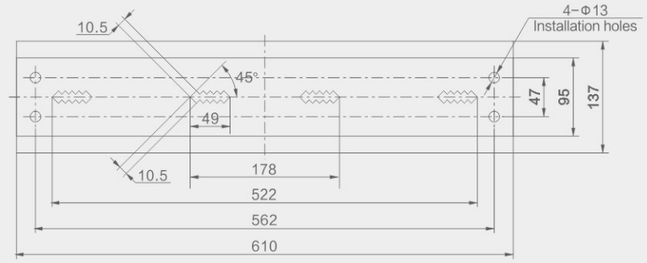

Base mounting hole size

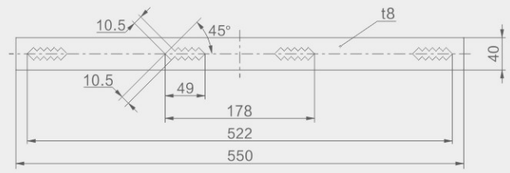

Installation backplane dimensions

B

Isolation switch series

Professional manufacturer

>>> you can count on >>>

DGG®
DENGGAO ELECTRIC

GW4A-12 series

Outdoor high-voltage AC isolation switch



Overview

GW4A−12 series improved outdoor high−voltage AC isolation switch (hereinafter referred to as "isolation switch") is an outdoor high−voltage switchgear with a rated frequency of 50Hz. It is used for switching 10kV high−voltage lines with voltage and without load, as well as for electrical isolation of high−voltage busbars, circuit breakers and other electrical equipment under maintenance from live high−voltage lines. It can also be used for breaking and closing very small capacitive and inductive currents.

The isolation switch complies with technical standards such as GB/T 1985−2014 "High voltage AC isolation switches and grounding switches" and DL/T 486−2010 "High voltage AC isolation switches and grounding switches".

DGG®
DENGGAO ELECTRIC

Model and meaning

G	W	4	A	−	12	□	(W)	/	□	−	□
Isolation switch	Outdoors	Design No.	First design improvement		Rated voltage (kV)	D: Single grounding switch IID: Double grounding switch	Anti fouling type		Rated current (A)		Rated short−term withstand current (kA)

Environmental conditions

- ◇ Altitude: not exceeding 1000m. If the altitude is higher than 1000m, the rated insulation level should be adjusted accordingly;
- ◇ Environmental temperature: upper limit +45℃, lower limit −40℃, hottest month average temperature of 30℃, maximum daily temperature difference of 25K;
- ◇ Solar radiation intensity (outdoor): 0.1W/cm^2;
- ◇ Wind speed/pressure (outdoor): 34m/s (700Pa);
- ◇ Pollution level: e−level;
- ◇ Ice thickness: ⩽20mm;
- ◇ Humidity: Daily average relative humidity ⩽95%, monthly average relative humidity ⩽90%;
- ◇ Earthquake tolerance: horizontal acceleration of 0.3m/s^2. vertical acceleration of 0.15m/s^2;
- ◇ Safety factor: sine resonance three cycle wave, safety factor above 1.67.

Feature

- ◇ Adopting a refined and improved design, installation does not require welding, and operation is simple and convenient;
- ◇ Adopting a double column center opening and contact transfer structure, it has the ability to automatically clean the contacts and strong operational reliability;
- ◇ The contact finger is made of high−strength, high conductivity, and high elasticity materials, which can rely on its own elasticity to clamp the contact, avoiding the vicious cycle caused by spring corrosion, reduced contact clamping force caused by heating annealing, increased contact resistance, and intensified contact heating;
- ◇ The insulator is made of high−strength porcelain material with a large creep distance design, which has strong pollution resistance and environmental adaptability, and can meet the operational requirements in high−altitude areas;
- ◇ The rotating part is designed according to maintenance free requirements.

Main technical parameters

No.	Project		Unit	Technical parameter			
1	Rated voltage		kV	12			
2	Rated frequency		Hz	50			
3	Rated current		A	630	1250	2000	2500
4	Rated short−term withstand current		kA	20/25	25/31.5	31.5	31.5/40
5	Rated short−term withstand current (peak)		kA	50/63	63/80	80	80/100
6	Rated short−term power frequency withstand voltage	Interphase and ground	kV/min	42/1			
		Fracture surface		48/1			
7	Rated lightning impulse withstand voltage	Interphase and ground	kV	75			
		Fracture surface		85			
8	Duration of rated short−term withstand current	Isolation switch	S	4			
		Grounding switch		2			
9	Loop resistance		μ Ω	⩽100		⩽80	
10	External insulation creepage distance		mm	⩾372(E−level anti fouling)			
11	Mechanical lifespan		Times	2000(Isolation switch/grounding switch)			

Note: If the altitude is higher than 1000m, the rated insulation level should be adjusted accordingly.

Ordering Notice

- ◇ Please indicate the product name and model;
- ◇ Please indicate the rated voltage, rated current, and rated short−term withstand current;
- ◇ Please indicate whether there is a grounding device or the type, direction, and type of grounding switch;
- ◇ Please indicate the operating mechanism model, auxiliary contact type and quantity;
- ◇ Please indicate the order quantity and delivery date.

GW4A-12 series
Outdoor high-voltage AC isolation switch
DGG® DENGGAO ELECTRIC

Appearance and installation dimensions

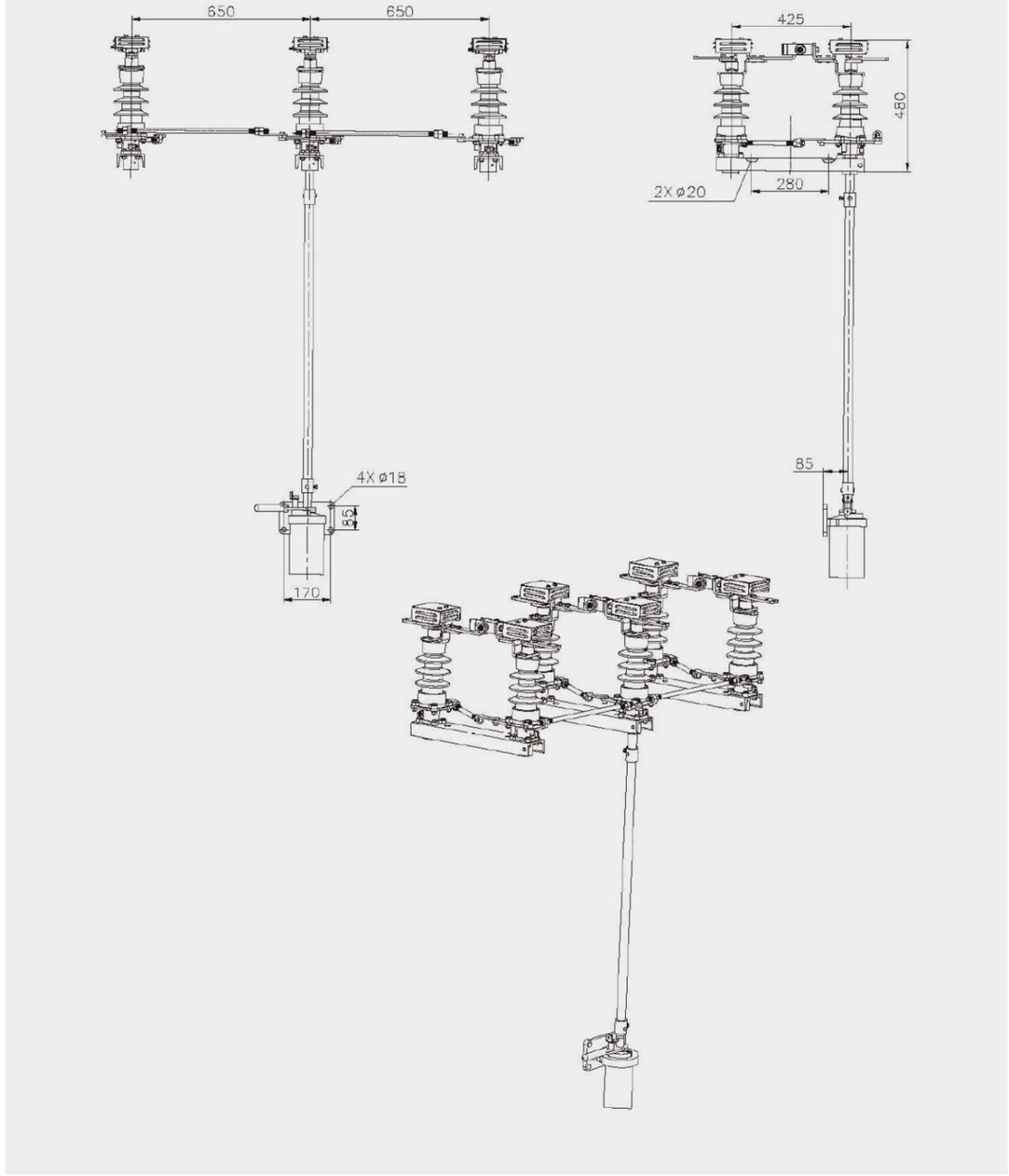

B

Isolation switch series

Professional manufacturer

>>> you can count on >>>

DGG®
DENGGAO ELECTRIC

GW4A-40.5W series

Outdoor high-voltage AC isolation switch

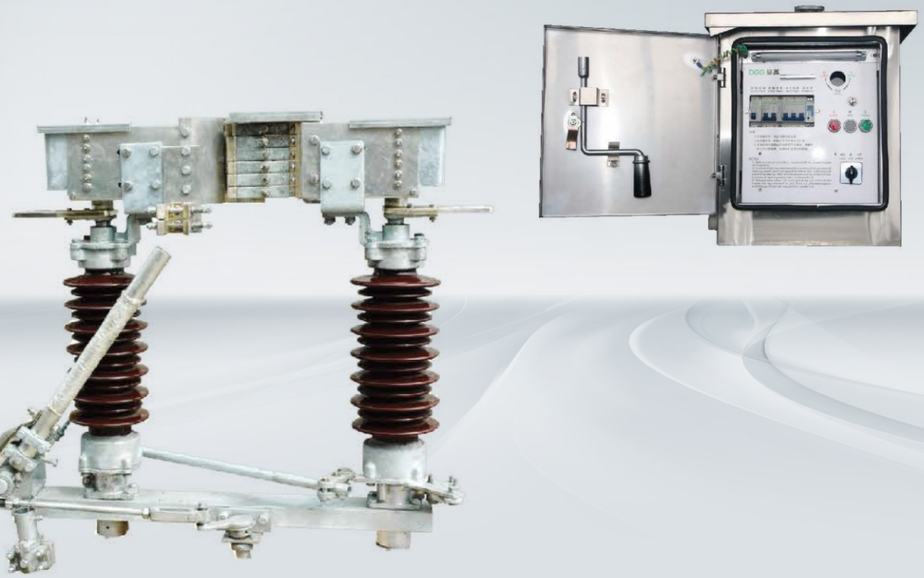

Overview

GW4A-40.5 series improved outdoor high-voltage AC isolation switch (hereinafter referred to as "isolation switch") is an outdoor high-voltage switchgear with a rated frequency of 50Hz. It is used for switching 35kV high-voltage lines with voltage and without load, as well as for electrical isolation of high-voltage busbars, circuit breakers and other electrical equipment under maintenance from live high-voltage lines. It can also be used for breaking and closing very small capacitive and inductive currents.

The isolation switch complies with technical standards such as GB/T 1985-2014 "High voltage AC isolation switches and grounding switches" and DL/T 486-2010 "High voltage AC isolation switches and grounding switches".

DGG®
DENGGAO ELECTRIC

Model and meaning

G	W	4	A	-	40.5	□	(W)	/	□	-	□
Isolation switch	Outdoors	Design No.	First design improvement		Rated voltage (kV)	D: Single grounding switch IID: Double grounding switch	Anti fouling type		Rated current (A)		Rated short-term withstand current (kA)

Environmental conditions

- Altitude: not exceeding 1000m. If the altitude is higher than 1000m, the rated insulation level should be adjusted accordingly;
- Environmental temperature: upper limit +45℃, lower limit −40℃, hottest month average temperature of 30℃, maximum daily temperature difference of 25K;
- Solar radiation intensity (outdoor): 0.1W/cm^2;
- Wind speed/pressure (outdoor): 34m/s (700Pa);
- Pollution level: e-level;
- Ice thickness: ≤20mm;
- Humidity: Daily average relative humidity ≤95%, monthly average relative humidity ≤90%;
- Earthquake tolerance: horizontal acceleration of 0.3m/s^2. vertical acceleration of 0.15m/s^2;
- Safety factor: sine resonance three cycle wave, safety factor above 1.67.

Feature

- Adopting a refined and improved design, installation does not require welding, and operation is simple and convenient;
- Adopting a double column center opening and contact rotation structure, it has the ability to automatically clean the contacts, improving contact reliability;
- The contact finger is made of a new type of material with high strength, high conductivity, and high elasticity. It relies on the elastic force of the contact finger to clamp the contact, avoiding the vicious cycle caused by spring corrosion, heat annealing, and reduced contact clamping force, as well as intensified contact heating;
- The rotating part is designed to be maintenance free, and the rotating seat is designed as a sealed structure. In an environment where water vapor, dust, and harmful gases cannot enter, making bearings and lubricating grease always in good working condition, bearings will never rust, lubricating grease will not lose, and will never dry up, so that the operating torque of the product will not increase after long-term operation;
- The structure adopts a combination of stainless steel shaft pins and oil-free self-lubricating shaft bearings, and all steel parts are hot-dip galvanized on the surface to ensure flexible, lightweight, reliable, and never corroded product operation;
- The insulator is made of high-strength porcelain material with a large creep distance design, which has strong pollution resistance and environmental adaptability, and can meet the operational requirements in high-altitude areas.

Main technical parameters

No.	Project		Unit	Technical parameter			
1	Rated voltage		kV	40.5			
2	Rated frequency		Hz	50			
3	Rated current		A	630	1250	2000, 2500	3150, 4000
4	Rated short-term withstand current		kA	20/25	25/31.5	31.5	40/50
5	Rated short-term withstand current (peak)		kA	50/63	63/80	80	100/125
6	Rated short-term power frequency withstand voltage	Interphase and ground (dry test)	kV/min	95/1			
		Interphase and ground (dry test)		118/1			
		Interphase and ground (wet test)		95/1			
7	Rated lightning impulse withstand voltage	Interphase and ground	kV	185			
		Fracture surface		215			
8	Duration of rated short-term withstand current	Isolation switch	S	4			
		Grounding switch		2			
9	Main circuit resistance		μ Ω	≤100		≤80	
10	Creepage distance		mm	≥1256(e-level anti fouling)			
11	Equipped with operating mechanism	Manual operation mechanism		CS14G (without grounding switch)			
				Main switch CS14G, ground switch CS11 (with single/double grounding switch)			
		Electric motor operating mechanism		CJ6 type, motor voltage AC380V or DC220V, control voltage AC220V or DC220V, auxiliary contact 8 normally open and 8 normally closed (standard configuration)			
12	Mechanical lifespan		Times	5000(Isolation switch/grounding switch)			

Note: If the altitude is higher than 1000m, the rated insulation level should be adjusted accordingly.

Ordering Notice

- ◇ Please indicate the product name and model;
- ◇ Please indicate the rated voltage, rated current, and rated short-term withstand current;
- ◇ Please indicate whether a grounding switch is required;
- ◇ Please indicate the model of the operating mechanism, the type and quantity of auxiliary contacts;
- ◇ If an electric operating mechanism is required, please indicate its motor voltage and control voltage;
- ◇ Please indicate the order quantity and delivery date.

GW4A-40.5W series
Outdoor high-voltage AC isolation switch
DGG® DENGGAO ELECTRIC

B

Appearance and installation dimensions

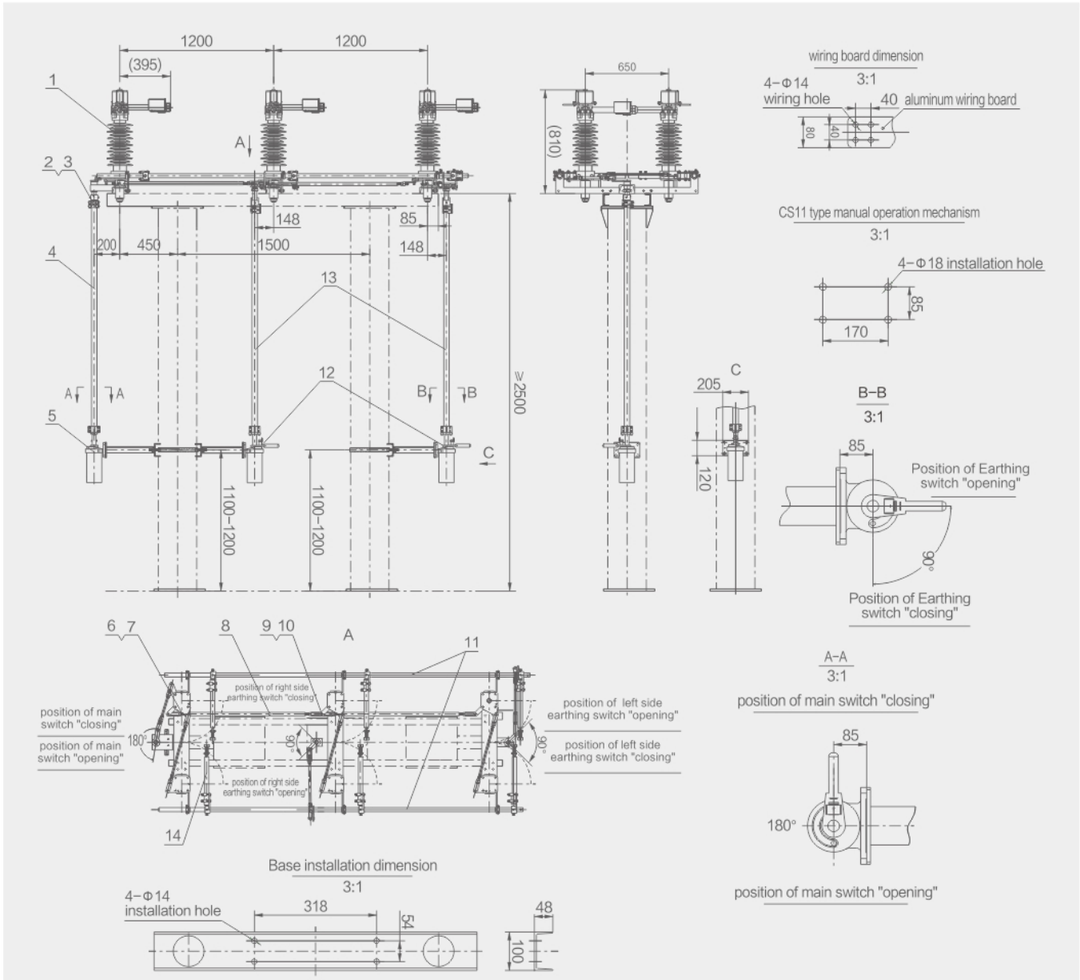

Configuration list:
1. Switch body (double earthing switch)
2. Upper hoop
3. Hoop clamp
4. Main switch vertical connect tube (2 meter, equipped by supplier)
5. CS11 type manual operation mechanism 180° (For main switch)
6. Phase pulling plate (left)
7. Phase pulling plate bolts (left)
8. Main switch phase connect tube (Equipped by supplier)
9. Phase pulling plate (right)
10. Phase pulling plate bolts (right)
11. Earthing switch horizontal connect tube (Equipped by supplier)
12. CS11 type manual operation mechanism 90° (For earthing switch)
13. Earthing switch vertical connect tube (2 meter, equipped by supplier)
14. Earthing switch component (For earthing switch, equipped by supplier)

Technical Specification:
1. Double earthing switch and 3-phase.
2. Main switch manual operation(6NO, 6NC), earthing switch manual operation (4NO, 4NC). Equipped with CS11 type manual operation mechanism.
3. Steel bracket and base bolt equipped by user.

Notice: steel bracket, bracket cross arm, installation accessories (standard element, foundation bolt, mechanism installation bracket) equipped by user

B

Isolation switch series

Professional manufacturer

>>> you can count on >>>

DGG®
DENGGAO ELECTRIC

GN22-1.5 series

Indoor single-phase DC isolation switch

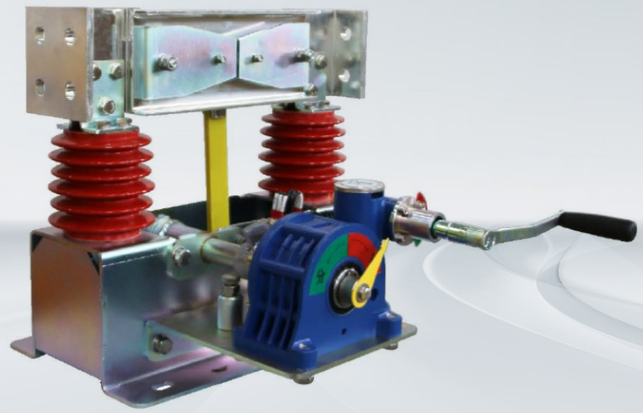

Overview

GN22-1.5kV/3150A isolation switch is a high current indoor high-voltage isolation switch, suitable for rated voltage DC1.5kV, and used as a circuit breaker in power systems with voltage and no load. It adopts a two-step locking method, which ensures excellent thermal stability and low operating force of the switch. It adopts new materials and processes such as epoxy resin and insulators, as well as tin or silver plating, to improve the conductivity of the switch, make it small in size, and lightweight. Its output terminals are easy to connect with vacuum circuit breakers, oil circuit breakers, and busbars, which can reduce the volume of the switchgear, reduce transition joints, and lower costs.

Main technical parameters

No.	Project	Unit	Technical parameter
1	Operating voltage	kV	DC1.5
2	Rated voltage	kV	1.8
3	Rated current	kA	2.6/4
4	Rated peak withstand current	kA	135
5	Rated short-term withstand current	kA	95
6	Power frequency withstand voltage for 1 min, phase to phase, to ground	kV	3
7	1min power frequency withstand voltage	kV	9.2
8	Rated impulse withstand voltage	kV	20
9	Mechanical lifespan	Times	20000
10	Rated operating voltage	V	DC24/48/110/220

Note: If the altitude is higher than 1000m, the rated insulation level should be adjusted accordingly.

DGG®
DENGGAO ELECTRIC

Appearance and installation dimensions

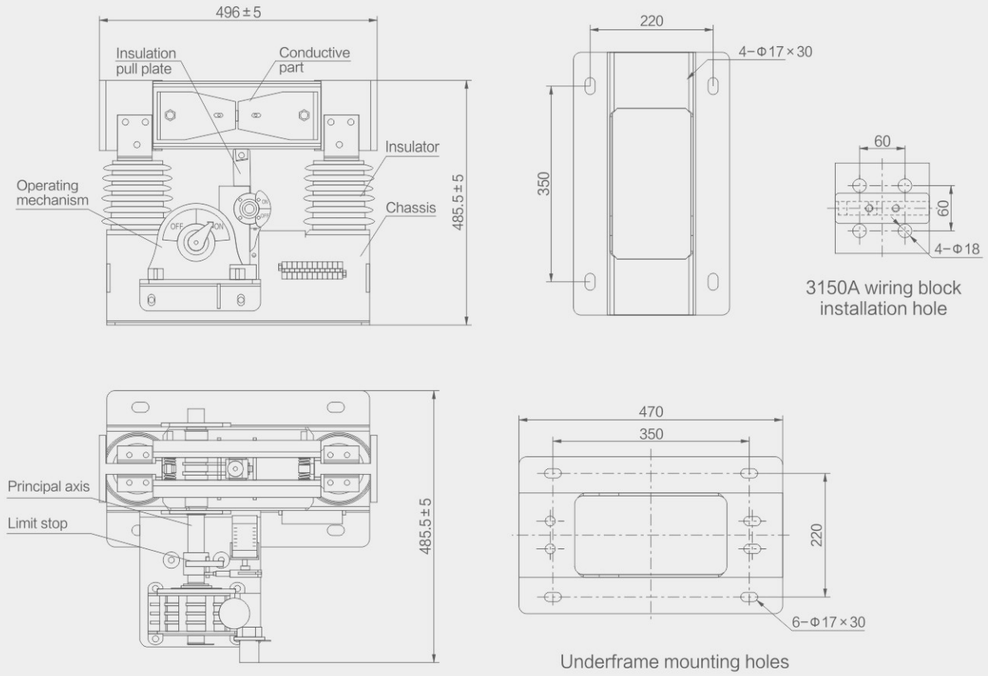

Terminal wiring diagram

Wiring terminals (JX)

DL-1	DL-2	DL-3	DL-4	DL-5	DL-6	DL-7	DL-8	DL-9	DL-10	DL-11	DL-12
1	2	3	4	5	6	7	8	9	10	11	12

Auxiliary switch (DL)

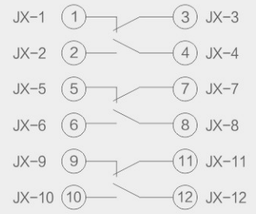

The switch is in the closed position

B

Isolation switch series

Professional manufacturer
>>> you can count on >>>

DGG®
DENGGAO ELECTRIC

RH-B series

Combination electrical - fuse type isolation switch

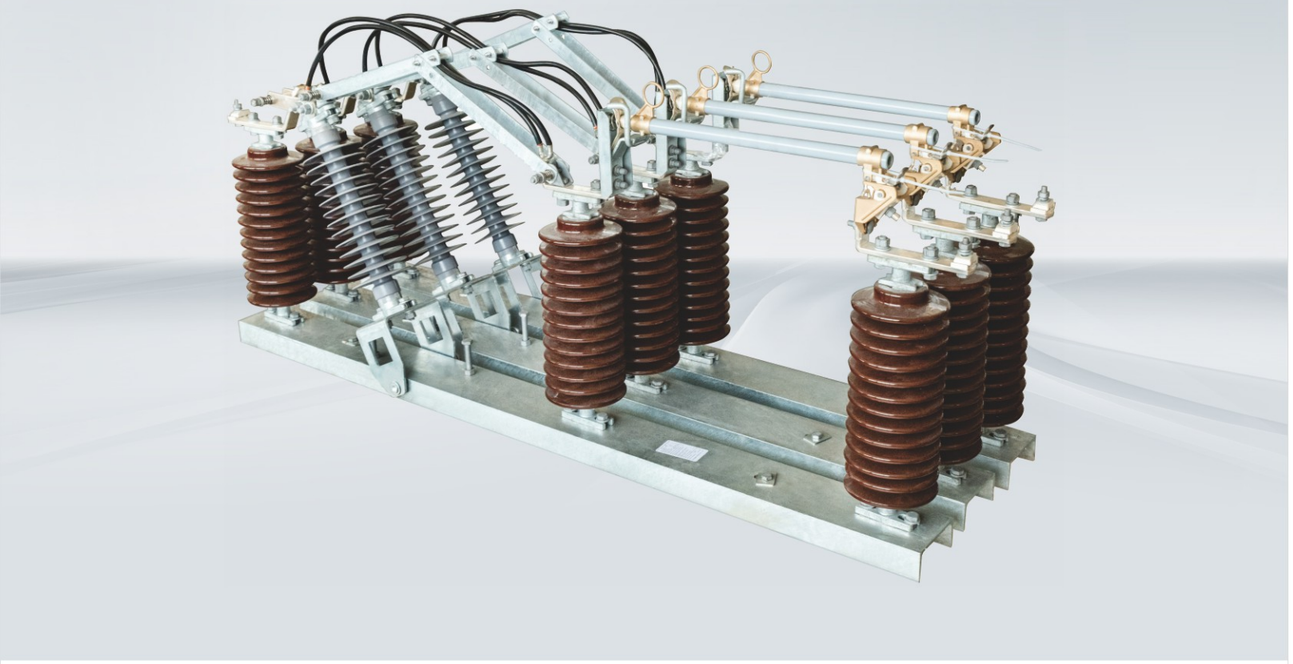

Overview

Combination electrical − fuse type isolation switch is a simple and effective manually operated protective device, mainly used for isolating circuits or short circuit protection in circuits.

Isolation switch is a switch device mainly used for isolating power supply, switching operation, connecting and cutting off small current circuits, without arc extinguishing function. When the isolation switch is in the open position, there is an insulation distance and obvious disconnection mark between the contacts that meets the specified requirements; A switchgear that can withstand the current under normal circuit conditions and the current under abnormal conditions (such as short circuits) within a specified time when in the closed position. It is generally used as a high−voltage isolation switch, that is, an isolation switch with a rated voltage of 1kV or above. Its working principle and structure are relatively simple, but due to its large usage and high reliability requirements, it has a significant impact on the design, establishment, and safe operation of substations and power plants. The main characteristic of isolation switches is that they have no arc extinguishing ability and can only open and close circuits without load current. The entry introduces the functions, characteristics, types, applications, error prevention improvements, maintenance, and common problems of isolation switches.

DGG®
DENGGAO ELECTRIC

A fuse is the simplest and most widely used protective electrical device. It generally consists of a melt tube, melt, arc extinguishing filler, indicator, static contact seat, etc. In the factory power supply and distribution system, high−voltage fuses are widely used as short−circuit and overload protection for small and less important loads in transmission and distribution lines, as well as power transformers (including voltage transformers). It is both economical and can meet certain reliability requirements. When a short circuit or overload current passes through a fuse, the melt itself is heated and melted, thereby cutting off the circuit and achieving the purpose of protection.

Feature

- Simple structure, beautiful appearance, and convenient installation;
- The insulator is made of high−strength porcelain material with a large creep distance design, which has strong pollution resistance and environmental adaptability, and can meet the operational requirements in high−altitude areas;
- Equipped with an interlocking device, it can effectively prevent accidental operation of the grounding knife;
- Easy to operate, reliable to operate, and can be equipped with manual or electric operating mechanisms according to user requirements;
- Insulating porcelain sleeves or silicone rubber composite sleeves both adopt a large climbing distance design, which has strong pollution resistance and environmental adaptability, good insulation performance, and can meet the operational requirements in high−altitude areas;
- Quick melting, good performance, and large breaking capacity;
- The replacement of fusion tubes is simple and convenient.

Environmental conditions

- Altitude: not exceeding 1000m. If the altitude is higher than 1000m, the rated insulation level should be adjusted accordingly;
- Environmental temperature: upper limit +45℃, lower limit −40℃, hottest month average temperature of 30℃, maximum daily temperature difference of 25K;
- Solar radiation intensity (outdoor): 0.1W/cm^2;
- Wind speed/pressure (outdoor): 34m/s (700Pa);
- Pollution level: e−level;
- Ice thickness: ≤10mm.
- Humidity: Daily average relative humidity ≤95%, monthly average relative humidity ≤90%;
- Earthquake resistance: horizontal acceleration of 0.3 m/s^2, vertical acceleration of 0.15 m/s^2;
- Safety factor: Sinusoidal resonance three cycle wave, safety factor of 1.67 or above.

Ordering Notice

- Please indicate the product name and model;
- Please indicate the rated voltage, rated current, and rated short−term withstand current;
- Please indicate whether a grounding switch is required;
- Please indicate the model of the operating mechanism, the type and quantity of auxiliary contacts;
- If an electric operating mechanism is required, please indicate its motor voltage and control voltage;
- Please indicate the order quantity and delivery date.

Main technical parameters

Technical parameters of the isolation switch section

No.	Project		Unit	Technical parameter			
1	Rated voltage		kV	11		33	
2	Rated current		A	400	630	400	630
3	Rated short-term withstand current		kA/3s	12.5	20	12.5	20
4	Peak withstand current		kA	31.5	50	31.5	50
5	Power frequency impulse withstand voltage	Phase-to-ground	kV	38		70	
		Fracture surface		42		80	
6	Lightning impulse withstand voltage	Phase-to-ground	kV	75		170	
		Fracture surface		95		195	
7	Creepage distance		mm	⩾372		⩾900	

Technical parameters of the fuse section

No.	Project		Unit	Technical parameter			
1	Rated voltage		kV	11		33	
2	Rated current		A	100	200	100	200
3	Breaking current		kA	12.5	16	12.5	16
4	Power frequency impulse withstand voltage	Phase-to-ground	kV	38		70	
		Fracture surface		42		80	
5	Lightning impulse withstand voltage	Phase-to-ground	kV	75		170	
		Fracture surface		95		195	
6	Creepage distance		mm	⩾372		⩾900	

Appearance and installation dimensions

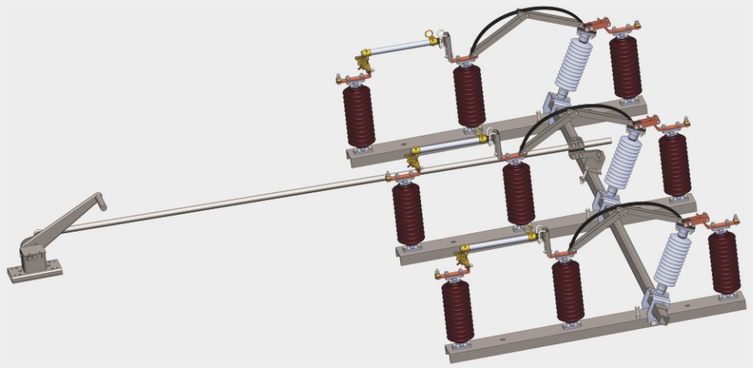

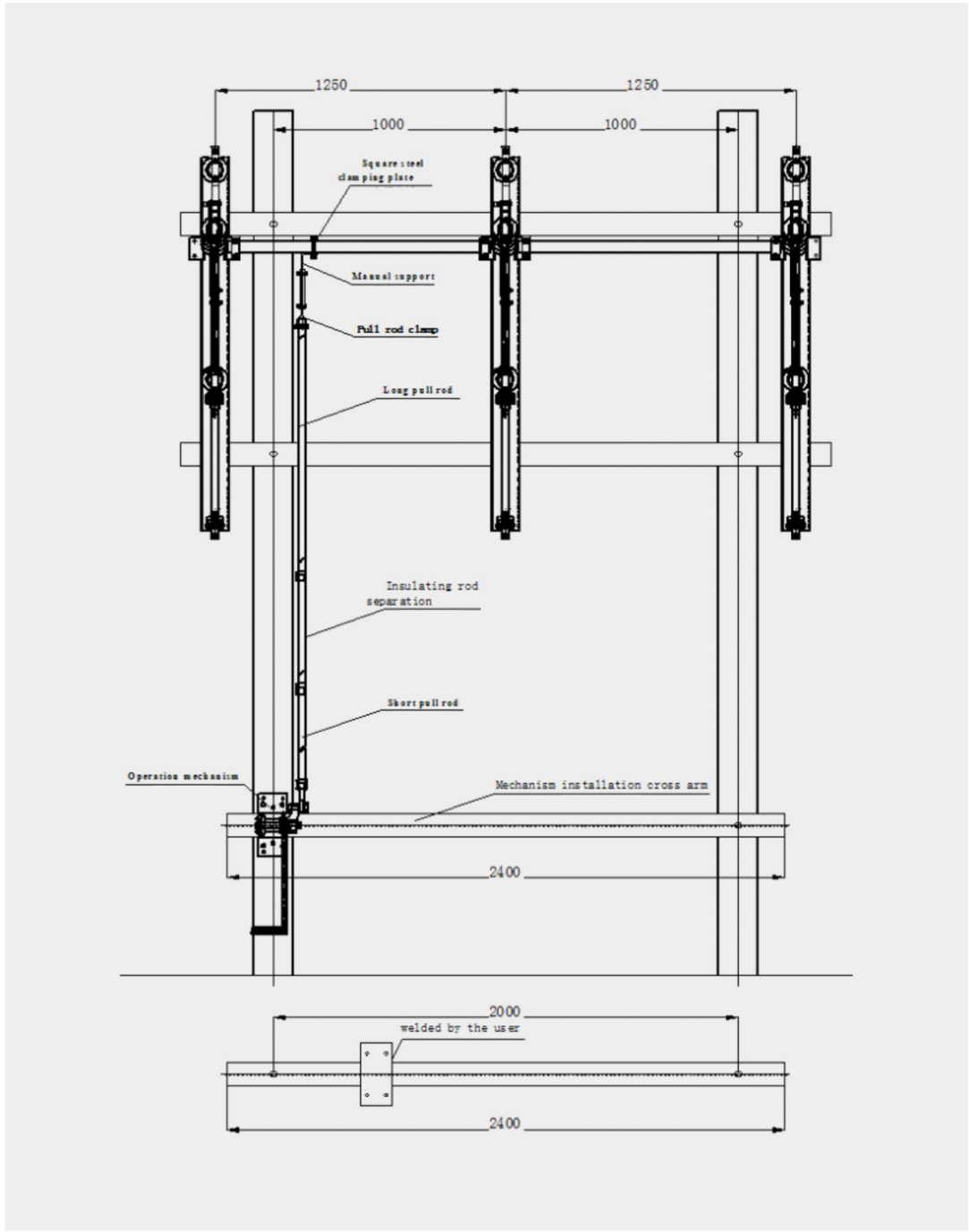

B

Isolation switch series

Professional manufacturer
>>> you can count on >>>

DGG®
DENGGAO ELECTRIC

GW5A-40.5 series

Outdoor high-voltage AC isolation switch





Overview

GW5A-40.5 series outdoor high-voltage AC isolation switch (hereinafter referred to as "isolation switch") is a 50Hz outdoor high-voltage electrical equipment, used for switching high-voltage lines with voltage and without load, as well as for electrical isolation of high-voltage busbars, circuit breakers, and other electrical equipment that are under maintenance from live high-voltage lines. It can also be used for breaking and closing very small capacitive and inductive currents.

The isolation switch complies with technical standards such as GB/T 1985-2014 "High voltage AC isolation switches and grounding switches" and DL/T 488-2010 "High voltage AC isolation switches and grounding switches".

DGG®
DENGGAO ELECTRIC

Model and meaning

G	W	5	A	-	40.5	□	(W)	/	□	-	□
Isolation switch	Outdoors	Design No.	First design improvement		Rated voltage (kV)	D: Single grounding switch IID: Double grounding switch	Anti fouling type		Rated current (A)		Rated short-term withstand current (kA)

Environmental conditions

- Altitude: not exceeding 1000m. If the altitude is higher than 1000m, the rated insulation level should be adjusted accordingly;
- Environmental temperature: upper limit +45℃, lower limit −40℃, hottest month average temperature of 30℃, maximum daily temperature difference of 25K;
- Solar radiation intensity (outdoor): 0.1W/cm^2;
- Wind speed/pressure (outdoor): 34m/s (700Pa);
- Pollution level: e-level;
- Ice thickness: ≤20mm;
- Humidity: Daily average relative humidity ≤95%, monthly average relative humidity ≤90%;
- Earthquake tolerance: horizontal acceleration of 0.3m/s^2. vertical acceleration of 0.15m/s^2;
- Safety factor: sine resonance three cycle wave, safety factor above 1.67.

Feature

- Adopting a refined and improved design, installation does not require welding, and operation is simple and convenient;
- Adopting a double column V-shaped rotating and contact turning structure, it has the ability to automatically clean the contacts, improving contact reliability;
- The touch finger is made of new materials with high strength, high conductivity, and high elasticity. By relying on the elastic force of the contact finger itself to clamp the contact, the vicious cycle caused by spring corrosion, reduced contact clamping force caused by heating and annealing, and intensified contact heating is avoided;
- The rotating part is designed according to maintenance free requirements;
- Adopting a combination structure of stainless steel shaft pins and oil-free self-lubricating shaft bearings, the steel parts are hot-dip galvanized to ensure flexible, lightweight, reliable, and never corroded product operation;
- The insulator is made of high-strength porcelain material, with a large climbing distance design, strong pollution resistance and environmental adaptability, which can meet the operational requirements in high-altitude areas.

Main technical parameters

No.	Project		Unit	Technical parameter		
1	Rated voltage		kV	40.5		
2	Rated frequency		Hz	50		
3	Rated current		A	630	1250	2000
4	Rated short-term withstand current		kA	20/25	25/31.5	31.5/40
5	Rated peak withstand current		kA	50/63	63/80	80/100
6	Rated short-term power frequency withstand voltage	Interphase and ground (dry test)	kV/min	95/1		
		Interphase and ground (dry test)		118/1		
		Interphase and ground (wet test)		95/1		
7	Rated lightning impulse withstand voltage	Ground	kV	185		
		Fracture surface		215		
8	Duration of rated short-term withstand current	Isolation switch	S	4		
		Grounding switch		2		
9	Main circuit resistance		μΩ	≤100	≤80	
10	Creepage distance		mm	>1256(e-level anti fouling)		
11	Equipped with operating mechanism	Manual operation mechanism		CS17-G5 (without grounding switch)		
				Main switch CS17-G5, ground switch CS17-G2 (with single/double grounding switch)		
		Electric motor operating mechanism		CJ6 type, motor voltage AC380V or DC220V, control voltage AC220V or DC220V, auxiliary contact 8 normally open and 8 normally closed (standard configuration)		
12	Mechanical lifespan		Times	2000(Isolation switch/grounding switch)		

Note: If the altitude is higher than 1000m, the rated insulation level should be adjusted accordingly.

Ordering Notice

- ◇ Please indicate the product name and model;
- ◇ Please indicate the rated voltage, rated current, and rated short-term withstand current;
- ◇ Please indicate whether a grounding switch is required;
- ◇ Please indicate the model of the operating mechanism, the type and quantity of auxiliary contacts;
- ◇ If an electric operating mechanism is required, please indicate its motor voltage and control voltage;
- ◇ Please indicate the order quantity and delivery date.

B

Appearance and installation dimensions

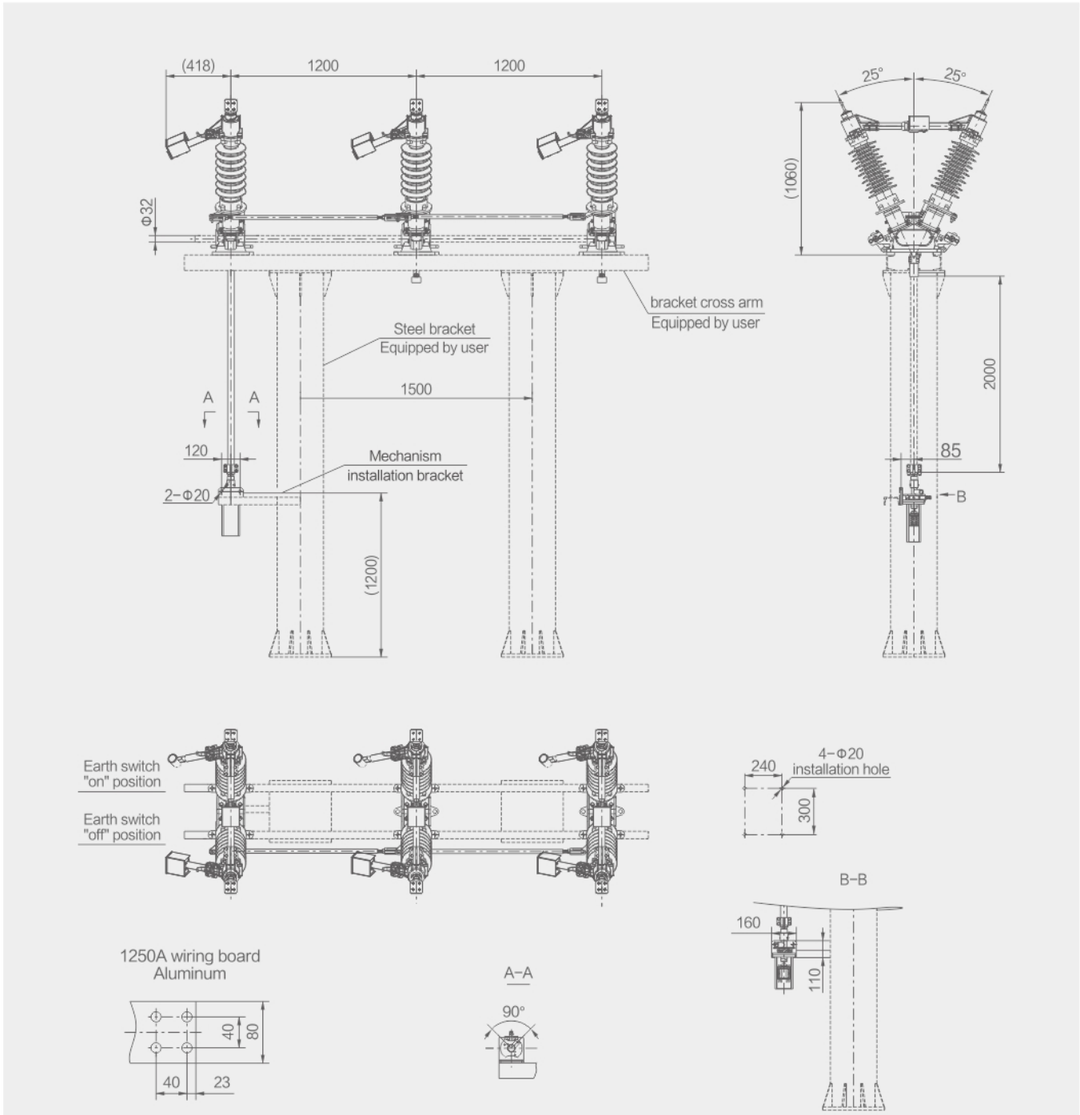

Notice: steel bracket, bracket cross arm, installation accessories (standard element, foundation bolt, mechanism installation bracket) equipped by user

The isolation switch is not grounded

B

Isolation switch series

Professional manufacturer

>>> you can count on >>>

DGG®
DENGGAO ELECTRIC

DGNPD series

Transformer neutral gap grounding protection device

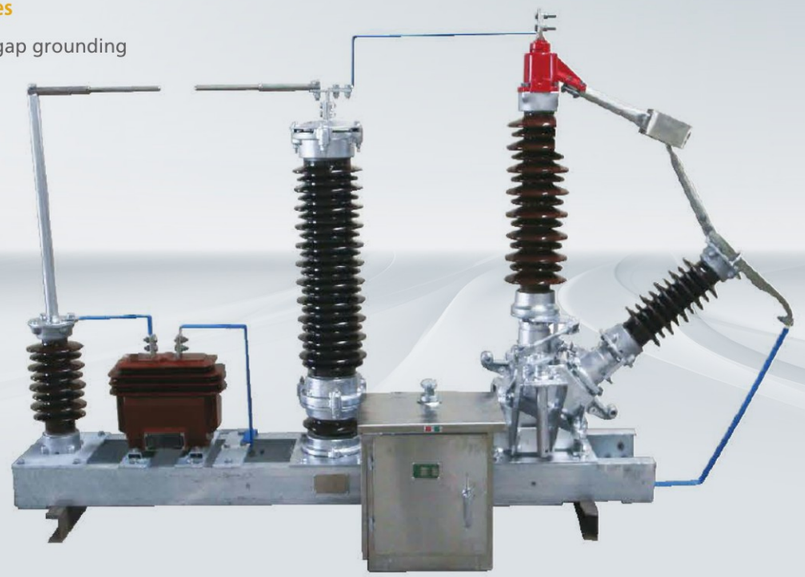

Overview

110kV and above power systems are operated by directly grounding the neutral point, commonly known as high current effective grounding systems. The neutral point of the transformer in operation is directly grounded, so there is no overvoltage or protection problem at the neutral point. However, in practical operation, in order to limit single-phase short-circuit current, prevent interference with communication, and meet the requirements of relay device setting configuration, some transformers are often operated without grounding their neutral points. Generally, only 30% to 50% of the transformer's neutral points are allowed to be directly grounded to ensure the safety and concealment of the system operation. In addition, in some ring or radial power supply networks, the dispatcher controls the power flow direction according to the operation needs, and consciously arranges the neutral point of an intermediate or terminal transformer to operate in a non direct grounding mode. Obviously, in the normal operation of the system with three-phase symmetry, the neutral point potential is zero regardless of whether it is grounded or not, and there is no need to take overvoltage protection measures. However, during operation, the transformer is often affected by various factors such as lightning, operation, refusal to operate, wire breakage, single-phase grounding faults, etc. The neutral point of the transformer will experience high overvoltage and be damaged, so it must be protected.

The power industry standard DL/T620-1997 "Overvoltage Protection and Insulation Coordination of AC Electrical Equipment" stipulates that "accidental formation of local ungrounded systems and excessive power frequency overvoltage should be avoided in 110kV and 220kV effectively grounded systems. For such local ungrounded systems that may form, the overvoltage protection of the neutral point of 110kV and 220kV transformers with power supply on the low-voltage side should be carried out by adding zinc oxide lightning arresters and parallel gaps.".

The DGNPD series transformer neutral point gap grounding protection complete set device (hereinafter referred to as the complete set device) produced by our company is developed to protect the insulation of the transformer neutral point from damage caused by lightning overvoltage, operating overvoltage, and power frequency (transient) overvoltage.

DGG®
DENGGAO ELECTRIC

Model and meaning

DG	N	P	D	□ -	□	/ □	- □
Enterprise code	Transformer neutral point	Overvoltage protection	Complete set of equipment	Design No.	Power frequency withstand voltage of transformer neutral point	Complete set of neutral point gap grounding protection for transformers	Rated voltage

Feature

- Complies with national and industry standards. The complete set of equipment is strictly designed and manufactured in accordance with the provisions of national standards GB 311.1-1997 "Insulation Coordination for High Voltage Transmission and Transformation Equipment", GB11032-2000 "Metal Oxide Surge Arresters for AC without Gap", and the power industry standard DL/T 620-1997 "Overvoltage Protection and Insulation Coordination for AC Electrical Equipment".
- The advantages of zinc oxide lightning arrester (MOA) and gap protection are fully utilized. Under lightning overvoltage and general operating overvoltage, MOA assumes the current protection function (in which case the discharge gap does not act); When there is a long-term high-frequency resonance overvoltage caused by partial ground loss or non full phase operation of the system, the accurate clearance action serves as a protection function for ferromagnetic resonance overvoltage and high-frequency resonance overvoltage, and prevents the occurrence of thermal collapse of the MOA.
- Overcoming the defect that the discharge point and arc point in the rod rod gap are at the same point, and the electrode is easily eroded by the arc;
- The protective device is a complete set of equipment, with a compact structure and convenient installation and maintenance.

Product mix

The DGNPD series transformer neutral point gap grounding protection complete set device is a complete set of equipment that integrates three parts in parallel, including a gapless metal oxide lightning arrester (MOA) and its discharge counter or monitor, discharge gap and current transformer, and grounding isolation switch.

Isolation switches are used to change the operating mode of the neutral point of transformers; MOA protects the neutral insulation of transformers from damage caused by lightning overvoltage and switching overvoltage; The Lightning Arrester Monitor (JCQ) monitors the leakage current of the lightning arrester during operation and records the number of times the lightning arrester operates; The discharge gap bears the protection function of long-term power frequency transient overvoltage; The zero sequence current flowing through the gap action of the current transformer detection.

The diagram on the right is a typical structural diagram of the complete set of transformer neutral point gap grounding protection device:

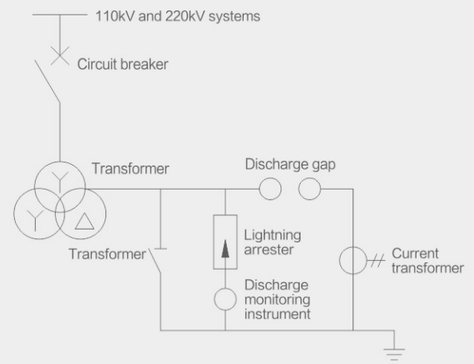

Environmental conditions

- Outdoor use;
- Environmental temperature: not lower than −40℃ and not higher than +40℃;
- Relative humidity: not more than 90%(25℃);
- Altitude: not exceeding 3000m;
- Maximum wind speed: not exceeding 35m/s;
- Grid frequency: 48−52Hz (50Hz system), 58−62H (60Hz system);
- Installation site: The air should not contain chemical corrosive gases and vapors, and there should be no explosive dust.

Main technical parameters

Project		Unit	DGNPD−85/180−60	DGNPD−95/250−72	DGNPD−140/325−96
Transformer neutral point withstand level	1.2/50 μ s lightning impulse withstand voltage (peak)	kV	180	250	325
	1 minute short−term power frequency withstand voltage	kV	85	95	140
Zinc oxide lightning arrester	Rated voltage (effective value)	kV	60	72	96
	Continuous operating voltage (effective value)	kV	48	58	77
	DC 1mA reference voltage	kV	⩾86	⩾103	⩾137
	8/20 μ s lightning impulse current residual voltage (peak)	kV	⩾144	⩾186	⩾260
Discharge gap	Power frequency discharge voltage (effective value)	kV	67.5 ± 5%	81 ± 5%	108 ± 5%
Isolation switch	Peak withstand current	A	400	400	400
	Rated current	kA	15.5	15.5	15.5
	Short time withstand current for 10 seconds	kA	4.2	4.2	4.2

Project		Unit	DGNPD−140/325−102	DGNPD−200/400−144	DGNPD−230/550−207
Transformer neutral point withstand level	1.2/50 μ s lightning impulse withstand voltage (peak)	kV	325	400	550
	1 minute short−term power frequency withstand voltage	kV	140	200	230
Zinc oxide lightning arrester	Rated voltage (effective value)	kV	102	144	207
	Continuous operating voltage (effective value)	kV	82	116	166
	DC 1mA reference voltage	kV	⩾158	⩾205	⩾292
	8/20 μ s lightning impulse current residual voltage (peak)	kV	⩾260	⩾320	⩾440
Discharge gap	Power frequency discharge voltage (effective value)	kV	115 ± 5%	162 ± 5%	234 ± 5%
Isolation switch	Peak withstand current	A	400	400	630
	Rated current	kA	15.5	15.5	50
	Short time withstand current for 10 seconds	kA	4.2	4.2	20

DGNPD series
Transformer neutral gap grounding protection device
DGG® DENGGAO ELECTRIC

B

Appearance and installation dimensions

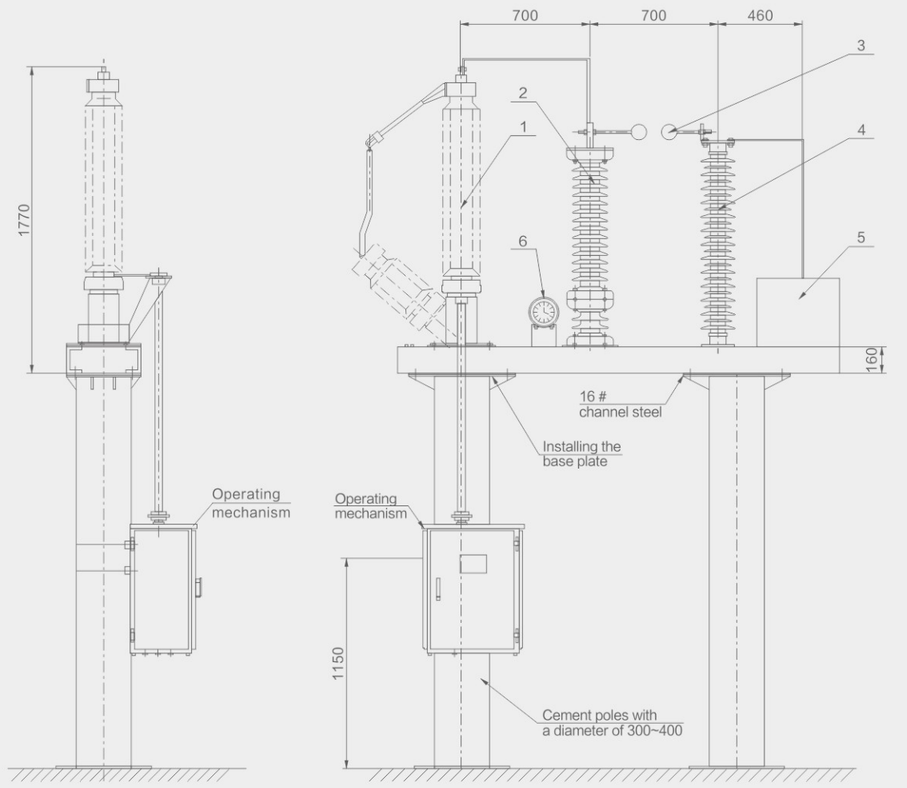

1− Isolation switch
2− Lightning arrester
3− Discharge gap
4−Pillar insulato
5−Current TIransformer
6−Discharge monitoring instrument

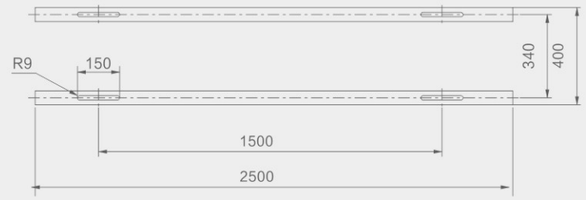

B

Isolation switch series

Professional manufacturer
>>> you can count on >>>

DGG®
DENGGAO ELECTRIC

GW1-12 series

Outdoor high-voltage AC isolation switch

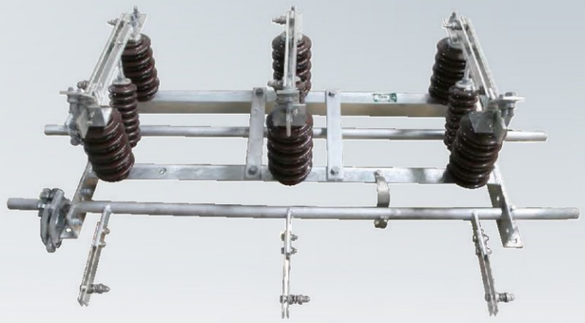

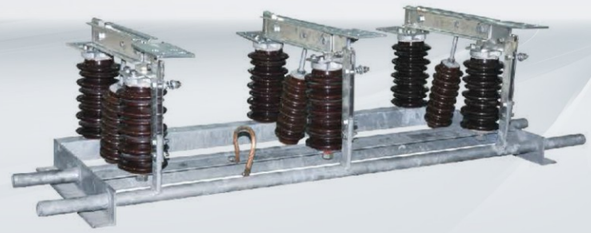

Overview

The GW1−12 series outdoor high−voltage AC isolation switch (hereinafter referred to as "isolation switch") is suitable for installation on outdoor high−voltage distribution equipment lines, providing 10kV lines with voltage and no load for switching, and for electrical isolation of high−voltage busbars, circuit breakers, and other electrical equipment under maintenance from live high−voltage lines. It can also be used to separate and close very small capacitive and inductive currents.

The isolation switch is a double column vertical opening type, equipped with manual or electric mechanisms, and can achieve three−phase linkage.

Isolation and isolation comply with technical standards such as GB/T 1985−2014 "High voltage AC isolation switches and grounding switches" and DL/T 486−2010 "High voltage AC isolation switches and grounding switches".

Model and meaning

G	W	1	−	12	(D)	W	/	□	−	□
Isolation switch	Outdoors	Design No.		Rated voltage (kV)	With grounding switch	Anti fouling type		Rated current (A)		Rated short−term withstand current (kA)

Feature

- Simple structure, beautiful appearance, and convenient installation;
- The insulator is made of high−strength porcelain material with a large climbing distance design, which has strong pollution resistance and environmental adaptability, and can meet the operational requirements in high−altitude areas;
- Equipped with an interlocking device, it can effectively prevent accidental operation of the grounding knife;
- Easy to operate, reliable to operate, and can be equipped with manual or electric operating mechanisms according to user requirements.

DGG®
DENGGAO ELECTRIC

Environmental conditions

- Altitude: not exceeding 1000m. If the altitude is higher than 1000m, the rated insulation level should be adjusted accordingly;
- Environmental temperature: upper limit +45℃, lower limit −40℃, hottest month average temperature of 30 ℃, maximum daily temperature difference of 25K;
- Solar radiation intensity (outdoor): 0.1W/cm^2;
- Wind speed/pressure (outdoor): 34m/s (700Pa);
- Pollution level: e−level;
- Ice thickness: ≤10mm;
- Humidity: Daily average relative humidity ≤95%, monthly average relative humidity ≤90%;
- Earthquake tolerance: horizontal acceleration of 0.3m/s^2, vertical acceleration of 0.15 m/s^2;
- Safety factor: sine resonance three cycle wave, safety factor above 1.67.

Main technical parameters

No.	Project		Unit	Technical parameter			
1	Rated voltage		kV	12			
2	Rated frequency		Hz	50			
3	Rated current		A	630		1250(1600)	
4	Rated short−term withstand current and duration	Isolation switch	kA/s	20/4	25/4	25/4	31.5/4
		Grounding switch	kA/s	20/2	25/2	25/2	31.5/2
5	Rated peak withstand current		kA	25	63	63	80
6	Rated short−term power frequency withstand voltage	Phase to phase, phase to ground (dry test)	kV/min	42/1			
		Fracture surface (dry test)		48/1			
		Phase to phase, phase to ground (wet test)		42/1			
7	Rated lightning impulse withstand voltage	Phase to phase, phase to ground	kV	75			
		Fracture surface		85			
8	Loop resistance		μ Ω	≤100		≤80	
9	Creepage distance		mm	≤372(E−level anti fouling)			
10	Mechanical lifespan		Times	3000Isolation switch/grounding switch			

Note: If the altitude is higher than 1000m, the rated insulation level should be adjusted accordingly.

Ordering Notice

- Please indicate the product name and model;
- Please indicate the rated voltage, rated current, and rated short−term withstand current;
- Please indicate whether a grounding switch is required;
- Please indicate the anti pollution level;
- Please indicate the operating mechanism model, auxiliary switch type, and number of contacts;
- Please indicate the order quantity and delivery time.

DGG®
DENGGAO ELECTRIC

Appearance and installation dimensions

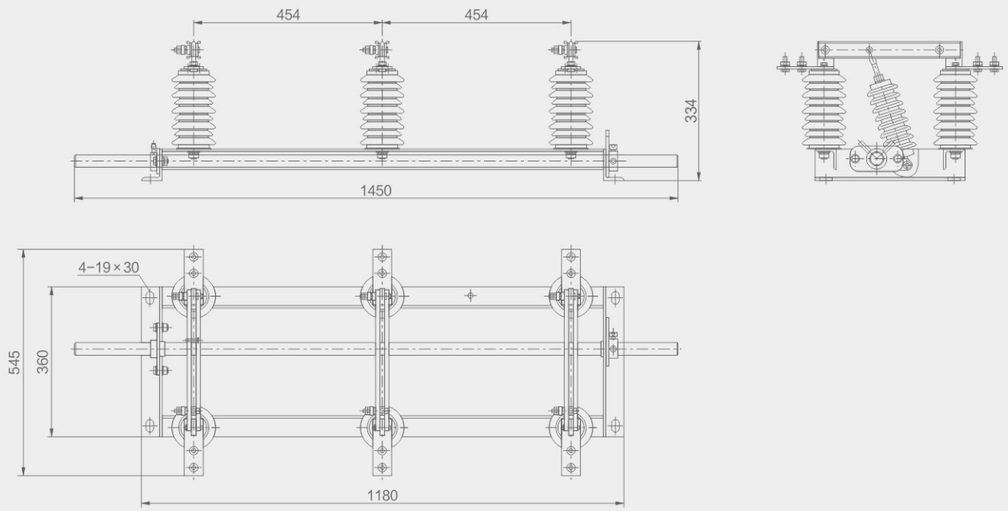

GW1−12W/630−20(25) Isolation Switch Appearance and Installation Dimensions

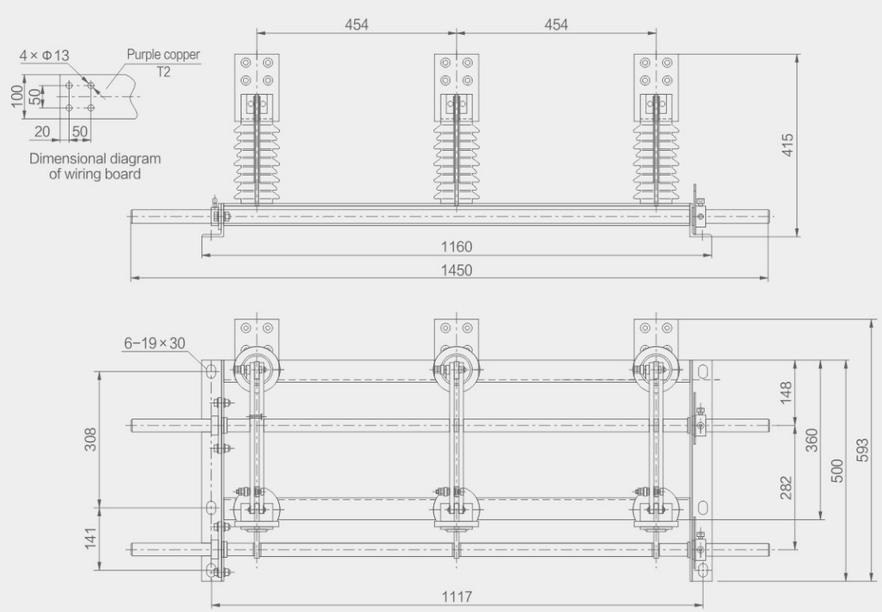

GW1−12DW/1600−31.5 Isolation Switch Appearance and Installation Dimensions

DROP TYPE FUSE

DGG®
DENGGAO ELECTRIC

C

DROP TYPE FUSE SERIES

77 (H)RW12-12(F) Series Outdoor High-voltage AC Drop Type Fuse
85 (H)RW10-40.5 Series Outdoor High-voltage Current Limiting Fuse
87 (H)RW5-40.5 Series Outdoor High-voltage Drop Type Fuse

C

Drop type fuse series

Professional manufacturer
>>> you can count on >>>

DGG®
DENGGAO ELECTRIC

(H)RW12-12(F) series

Outdoor high-voltage AC
drop type fuse



Overview

(H)RW12−12(F) outdoor high−voltage AC drop type fuse (hereinafter referred to as "fuse") is suitable for outdoor overhead distribution systems with a rated frequency of 50Hz and a rated voltage of 10kV. It serves as a protective element for circuits or electrical equipment in the event of overload or short circuit faults in the power system. When the fuse operates normally, it is connected in series in the power line, with the fuse in a taut state and the movable joint locked. When a fault occurs in the circuit, the fault current causes the fuse to melt, the movable joint to be released, and the fuse tube quickly drops, cutting off the circuit and providing safety protection for the maintenance of the circuit and equipment. Load type fuses add elastic contacts and arc extinguishing covers on the basis of ordinary types, used for breaking and closing load currents in power systems.

The fuse complies with technical standards such as GB/T 15166.3−2008 "High voltage AC Fuses Part 3: Jet Fuses" and DL/T 640−1997 "Technical Conditions for Ordering Outdoor AC High Voltage Drop type Fuses and Fuses".

Environmental conditions

- ◇ Altitude: ⩽ 1000m. If the altitude is higher than 1000m, the rated insulation level should be adjusted accordingly;
- ◇ Surrounding air temperature: maximum +40℃, minimum −25℃, daily temperature difference of 25K;
- ◇ Humidity: Daily average relative humidity ⩽95%, monthly average relative humidity ⩽90%;
- ◇ Solar radiation intensity: 0.1W/cm^2;
- ◇ Pollution level: not less than level d;
- ◇ Ice thickness: ⩽10mm;
- ◇ Outdoor wind speed (wind pressure): 35m/s(700Pa);
- ◇ Earthquake tolerance (horizontal acceleration): 0.3g.

DGG®
DENGGAO ELECTRIC

C

Model and meaning

(H)	R	W	12	−	12	(F)	/	□	−	□
Composite insulation	Fuses	Outdoors	Design serial number		Rated voltage (kV)	Load type		Rated current of the same family of fuse components (A)		Rated breaking current (kA)

Product structure

Main advantages and characteristics

- ◇ Insulators are made of high-strength ceramic or imported silicone rubber insulation materials, with a large creep distance design, strong pollution resistance and environmental adaptability, excellent insulation performance, and meeting the operational requirements in high-altitude areas;
- ◇ The upper contact adopts a silver to silver design, and the stainless steel spring of the contact provides high contact pressure, ensuring good conductive contact and minimal contact resistance, not exceeding 300 μΩ;
- ◇ The lower contact adopts a silver to silver design, providing a pair of current paths that are not connected to the hinge shaft optical feet;
- ◇ The fuse tube adopts an epoxy phenolic glass cloth tube with a fiber lining with a special UV resistant coating, which has excellent UV resistance performance;
- ◇ The parallel groove connector is made of cast brass material, which makes the connection very simple even if the size is not consistent due to the provision of two conduits;
- ◇ The ear shaft is made of high-strength cast bronze material and coated with silver on the surface, which is pressed on the surface of the hinge to ensure accurate alignment of the fuse tube during closing;
- ◇ The design of the baffle fully satisfies the rapid separation of the ends, the cable strands quickly pop out, and can reduce the force transmitted to the fuse chain when closed;
- ◇ The sleeve joint ensures reliable release after cutting;
- ◇ The rated current of the same family of fuse components is high, up to 200A, and the breaking capacity is strong, up to 16kA;
- ◇ According to user requirements, additional electrical grounding fixing devices can be added to facilitate users in conducting electrical grounding operations.

Main technical parameters

No.	Item		Unit	Technical parameter	
1	Rated frequency		Hz	50	
2	Rated voltage		kV	12	
3	Rated current of the same family of fuse components		A	⩽100	⩽200
4	Rated breaking current		kA	12.5	16
5	Rated short-term power frequency withstand voltage	To ground (dry/wet test)	kV/min	42/1	
		Fracture surface (dry/wet test)		48/1	
6	Lightning impulse withstand voltage	To the ground	kV	75	
		Fracture		85	
7	Creepage distance		mm	⩾372(E-level anti fouling)	
8	Mechanical lifespan		Times	500	
9	Service life		Year	⩾20	

Note: If the altitude is higher than 1000m, the rated insulation level should be adjusted accordingly.

(H)RW12-12(F) series
Outdoor high-voltage AC drop type fuse

C

Appearance and installation dimensions

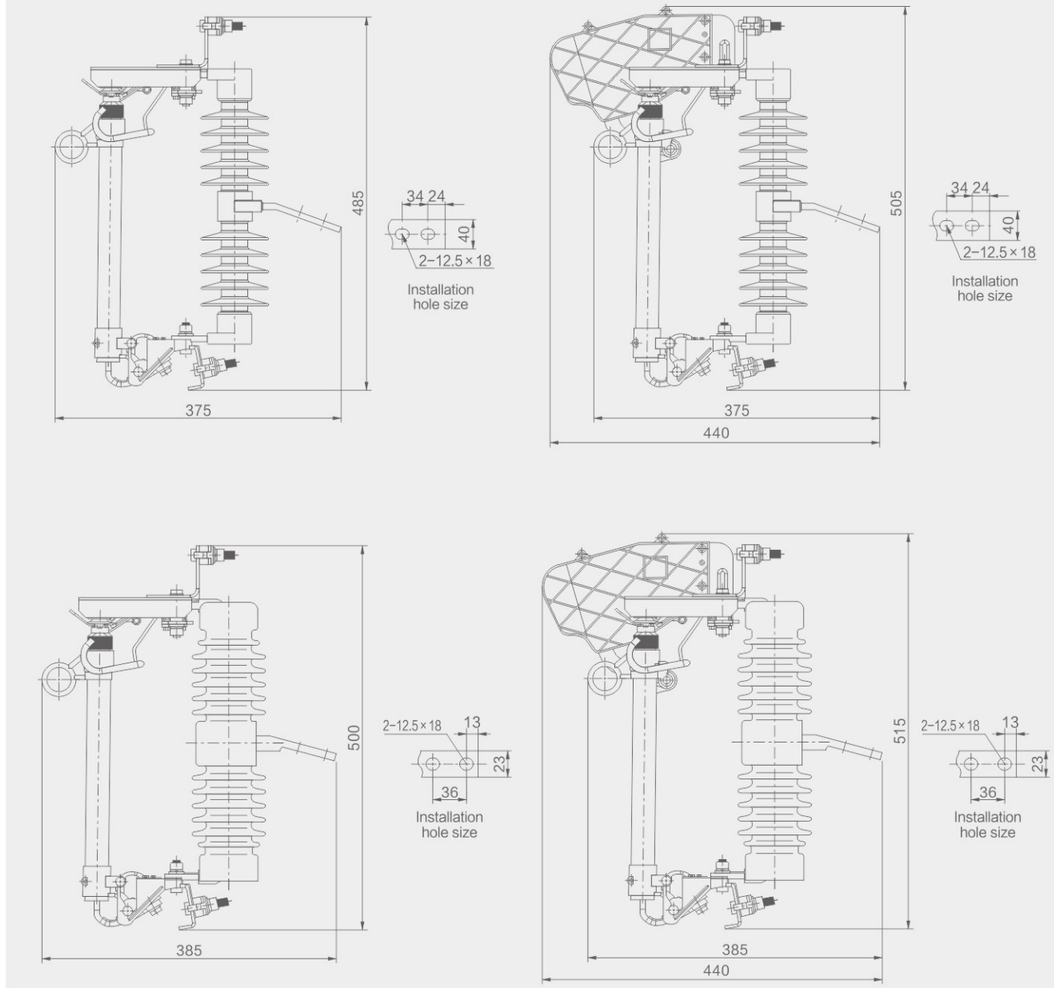

Ordering notice

- ◇ Please indicate the product name and model;
- ◇ Please indicate the rated voltage, rated current of the same family of fuse components, and rated breaking current;
- ◇ Please indicate whether spare parts are required;
- ◇ Please indicate the order quantity and delivery time.



12kV

Type	Rated voltage (kV)	Rated current (A)	Breaking current (A)	Impulse voltage (BIL)	Power-frequency withstand voltage (kV)	Leakage distance (mm)	Weight (kg)	Bale dimensions (cm)
DG-1	12	100	10000	110	40	245	7	41×39×11.5
DG-1	12	200	12000	110	40	245	7.5	



15kV

Type	Rated voltage (kV)	Rated current (A)	Breaking current (A)	Impulse voltage (BIL)	Power-frequency withstand voltage (kV)	Leakage distance (mm)	Weight (kg)	Bale dimensions (cm)
DG-2	15	100	10000	125	45	330	9	51×34×12.5
DG-2	15	200	12000	125	45	330	9.5	



24kV

Type	Rated voltage (kV)	Rated current (A)	Breaking current (A)	Impulse voltage (BIL)	Power-frequency withstand voltage (kV)	Leakage distance (mm)	Weight (kg)	Bale dimensions (cm)
DG-3	24	100	8000	150	65	420	11.5	52×38×13
DG-3	24	200	10000	150	65	420	12	

(H)RW12-12(F) series
Outdoor high-voltage AC drop type fuse
DGG® DENGGAO ELECTRIC



27kV

Type	Rated voltage (kV)	Rated current (A)	Breaking current (A)	Impulse voltage (BIL)	Power-frequency withstand voltage (kV)	Leakage distance (mm)	Weight (kg)	Bale dimensions (cm)
DG-4	27	100	8000	150	65	450	11.5	52×38×13
DG-4	27	200	10000	150	65	450	12	



33kV~36kV

Type	Rated voltage (kV)	Rated current (A)	Breaking current (A)	Impulse voltage (BIL)	Power-frequency withstand voltage (kV)	Leakage distance (mm)	Weight (kg)	Bale dimensions (cm)
DG-5	33	100	10000	170	70	660	14.5	66×37×14
DG-5	33	200	12000	170	70	660	15	



33kV~36kV

Type	Rated voltage (kV)	Rated current (A)	Breaking current (A)	Impulse voltage (BIL)	Power-frequency withstand voltage (kV)	Leakage distance (mm)	Weight (kg)	Bale dimensions (cm)
DG-6	33	100	10000	170	70	660	7	61×42×13
DG-6	33	200	12000	170	70	660	7.5	



24kV~27kV

Type	Rated voltage (kV)	Rated current (A)	Breaking current (A)	Impulse voltage (BIL)	Power-frequency withstand voltage (kV)	Leakage distance (mm)	Weight (kg)	Bale dimensions (cm)
DG-7	24	100	8000	150	65	370	11	52×38×10.5
DG-7	24	200	10000	150	65	370	11.5	



33kV~36kV

Type	Rated voltage (kV)	Rated current (A)	Breaking current (A)	Impulse voltage (BIL)	Power-frequency withstand voltage (kV)	Leakage distance (mm)	Weight (kg)	Bale dimensions (cm)
DG-8	33	100	10000	170	70	700	15.5	57×38×14.5
DG-8	33	200	12000	170	70	700	16	



12kV~15kV

Type	Rated voltage (kV)	Rated current (A)	Breaking current (A)	Impulse voltage (BIL)	Power-frequency withstand voltage (kV)	Leakage distance (mm)	Weight (kg)	Bale dimensions (cm)
DG-9	11	100	6000	110	42	340	7	47.5×27.5×11.5
DG-9	11	200	8000	110	42	340	7.5	



12kV~15kV

Type	Rated voltage (kV)	Rated current (A)	Breaking current (A)	Impulse voltage (BIL)	Power-frequency withstand voltage (kV)	Leakage distance (mm)	Weight (kg)	Bale dimensions (cm)
DG-10	11	100	6000	110	42	340	5	47.5×27.5×11.5
DG-10	11	200	8000	110	42	340	5.5	



33kV~36kV

Type	Rated voltage (kV)	Rated current (A)	Breaking current (A)	Impulse voltage (BIL)	Power-frequency withstand voltage (kV)	Leakage distance (mm)	Weight (kg)	Bale dimensions (cm)
DG-11	33	100	8000	170	70	780	23	69×28×18
DG-11	33	200	10000	170	70	780	23	



33kV~36kV

Type	Rated voltage (kV)	Rated current (A)	Breaking current (A)	Impulse voltage (BIL)	Power-frequency withstand voltage (kV)	Leakage distance (mm)	Weight (kg)	Bale dimensions (cm)
DG-12	33	100	8000	170	70	780	14	69×28×18
DG-12	33	200	10000	170	70	780	14	

C

Drop type fuse series

Professional manufacturer
>>> you can count on >>>

DGG®
DENGGAO ELECTRIC

(H)RW10-40.5 series

Outdoor high-voltage current limiting fuse

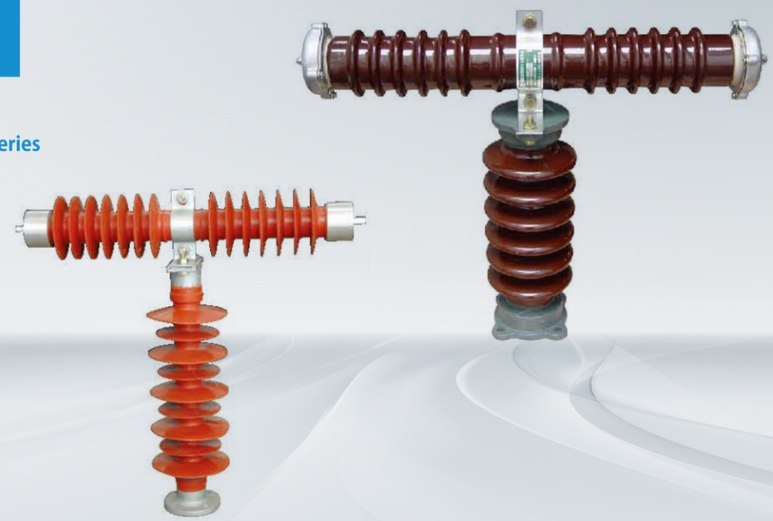

Overview

(H)RW10-40.5 outdoor high-voltage current limiting fuse (hereinafter referred to as "current limiting fuse") is an outdoor high-voltage protection device, suitable for AC 50Hz and rated voltage 35kV power systems, used for overload and short circuit fault protection of power transformers and power lines.

The fuse complies with technical standards such as GB/T 15166.2-2008 "High voltage AC fuses - Part 2: Current limiting fuses".

Model and meaning

(H)	R	W	10	-	40.5	/	□	-	□
Composite insulation	Fuses	Outdoors	Design serial number		Rated voltage (kV)		Rated current of the same family of fuse components (A)		Cut off the maximum short-circuit current limit value (kA)

Environmental conditions

- ◇ Altitude: ⩽1000m. If the altitude is higher than 1000m, the rated insulation level should be adjusted accordingly;
- ◇ Surrounding air temperature: maximum +40℃, minimum -25℃, daily temperature difference of 25K;
- ◇ Humidity: Daily average relative humidity ⩽95%, monthly average relative humidity ⩽90%;
- ◇ Solar radiation intensity: 0.1W/cm^2;
- ◇ Pollution level: not greater than level e;
- ◇ Ice thickness: ⩽10mm;
- ◇ Outdoor wind speed (wind pressure): 35m/s (700Pa);
- ◇ Earthquake resistance (horizontal acceleration): 0.3g.

Main technical parameters

No.	Item		Unit	(H)RW10-40.5/0.5-20	(H)RW10-40.5/2-20	(H)RW10-40.5/(3-10)-20
1	Rated frequency		Hz	50		
2	Rated voltage		kV	40.5		
3	Rated current of the same family of fuse components		A	0.5	2	3~10
4	Breaking capacity (three-phase)		MVA	1000	200	
5	Cut off the maximum short-circuit current limit value		kA	20		
6	Rated 1min power frequency withstand voltage	To ground	kV	95		
		Fracture surface		118		
7	Rated lightning withstand voltage	To ground	kV	185		
		Fracture surface		215		
8	The overvoltage multiple shall not exceed		Multiple	2.5		
9	Creepage distance		mm	⩾1256(E-level anti fouling), ⩾1013(D-level anti fouling)		
10	Mechanical lifespan		Times	500		
11	Protected objects			Voltage transformer	Power lines	

Note: If the altitude is higher than 1000m, the rated insulation level should be adjusted accordingly.

Appearance and installation dimensions

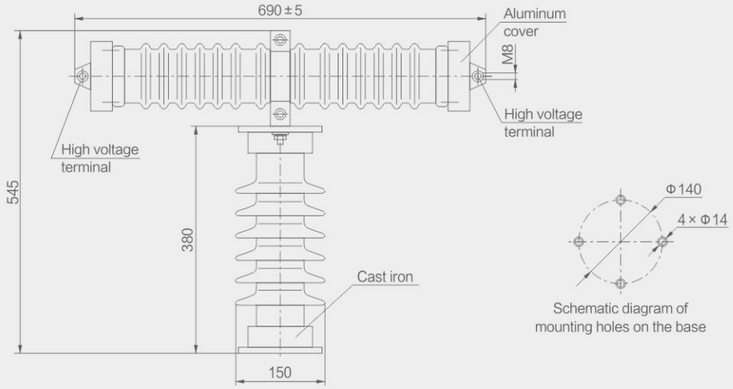

Ordering notice

- ◇ Please indicate the product name and model;
- ◇ Please indicate the rated voltage, rated current of the same family of fuse components, and maximum short-circuit current limit for cutting off;
- ◇ Please indicate whether spare parts are required;
- ◇ Please indicate the order quantity and delivery time.

C

Drop type fuse series

Professional manufacturer
>>> you can count on >>>

DGG®
DENGGAO ELECTRIC

(H)RW5-40.5 series

Outdoor high-voltage
drop type fuse

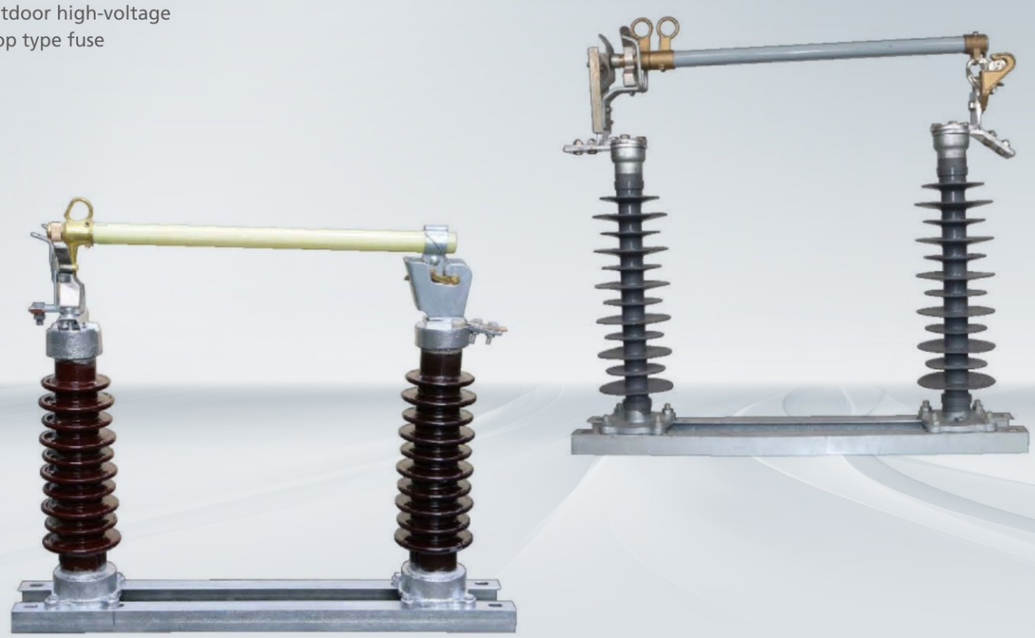

Overview

The (H)RW5-40.5 series outdoor high-voltage drop type fuse (hereinafter referred to as "fuse") is the most common short-circuit protection switch for distribution line branch lines and distribution transformers.

Fuses are suitable for short circuit and overload protection of transmission lines and power transformers in power systems with AC 50Hz and rated voltage of 35kV. Under certain conditions, it is possible to separate and combine no-load overhead lines, no-load transformers, and small load currents.

Fuses are widely used in distribution lines and primary side of distribution transformers for protection and equipment switching operations. Installed on the distribution line branch, it can reduce the power outage range.

The fuse complies with technical standards such as GB/T 15166.3-2008 "High voltage AC Fuses Part 3: Jet Fuses" and DL/T 640-1997 "Technical Conditions for Ordering Outdoor AC High Voltage Drop type Fuses and Fuses".

The fuse complies with technical standards such as GB/T 15166.2-2008 "High voltage AC fuses - Part 2: Current limiting fuses".

DGG®
DENGGAO ELECTRIC

C

Model and meaning

(H)	R	W	5	-	40.5	/	□	-	□
Composite insulation	Fuses	Outdoors	Design serial number		Rated voltage (kV)		Rated current of the same family of fuse components (A)		Cut off the maximum short-circuit current limit value (kA)

Environmental conditions

- ◇ Altitude: not exceeding 4000m;
- ◇ The ambient temperature shall not be higher than +40℃ and not lower than -40℃;
- ◇ The product is not suitable for the following places:
  1) Places with combustion or explosion hazards;
  2) Places with severe vibration or impact;
  3) Areas with conductive and chemical gas effects, as well as severe contamination and salt spray.

Main advantages and characteristics

- ◇ There is an obvious disconnection point that has the function of an isolation switch, creating a safe working environment for maintenance
- ◇ lines and equipment, and increasing the safety of maintenance personnel;
- ◇ Simple structure, high cost-effectiveness, easy operation, and easy maintenance;
- ◇ Strong adaptability to outdoor environments;
- ◇ Large climbing distance design to meet the operational requirements in high-altitude areas.

Main technical parameters

No.	Name		Unit	Data	
1	Rated frequency		Hz	50	
2	Rated voltage		kV	40.5	
3	Rated current of the same family of fuse components		A	100	200
4	Rated breaking current		kA	6	8
5	Rated short-term power frequency voltage	To the ground	kV/min	95/1	
		Fracture		118/1	
6	Lightning impulse withstand	To the ground	kV	185	
		Voltage		215	
7	Creepage distance		mm	> 1256	
8	Mechanical lifespan		Times	300	

Appearance and installation dimensions

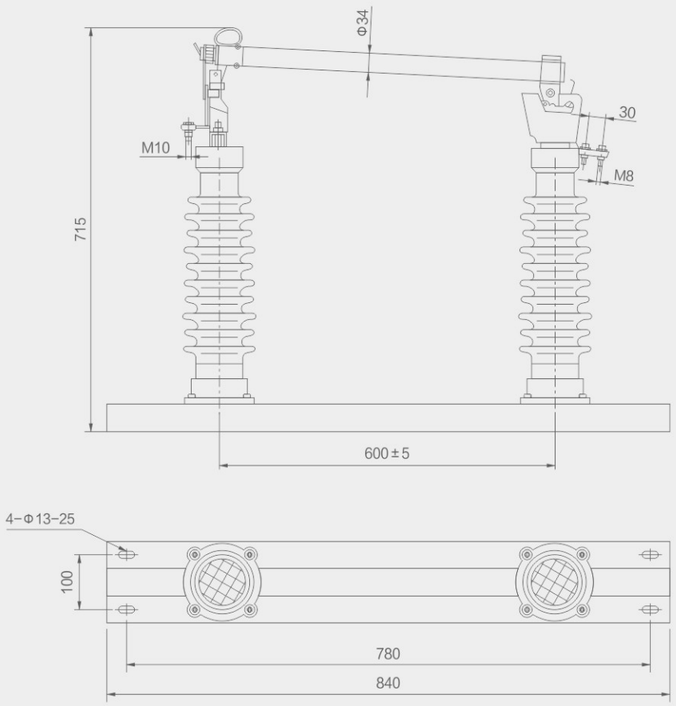

Ordering notice

- ◇ Please indicate the product name and model;
- ◇ Please indicate the rated voltage, rated current of the same family of fuse components, and rated breaking current;
- ◇ Please indicate whether spare parts are required;
- ◇ Please indicate the order quantity and delivery time.

LIGHTNING ARRESTER

D

LIGHTNING ARRESTER SERIES

91 YH Series Composite Jacket Lightning Arrester
103 Y/F Series Porcelain Jacket Lightning Arrester
111 YH Series The Metal Oxide Surge Arrester
117 TLB Series Disconnector
119 JS/JCQ/JSM Series Counters / Monitors
121 YH5WS Series Special Lightning Arrester

D

Lightning arrester series

Professional manufacturer
>>> you can count on >>>

DGG®
DENGGAO ELECTRIC

YH series

Composite jacket lightning arrester



Overview

Lightning arrester is the foundation of insulation coordination for various electrical equipment in the power system, such as transformers, reactors, capacitors, generators, motors, PT, CT, circuit breakers, contactors, etc. The protection performance of lightning arrester determines the internal and external insulation indicators of all electrical equipment in the power system, such as short-term power frequency withstand voltage, lightning impulse withstand voltage, and operating impulse withstand voltage.

Metal oxide lightning arrester, commonly known as "zinc oxide lightning arrester", is a new generation of lightning arrester that was widely promoted internationally in the 1980s by countries such as the United States and Japan. It is the most advanced product among conventional lightning arresters. Since the mid-1980s, China has fully introduced this technology. Through years of practice and digestion, the performance of AC lightning arresters from various professional lightning arrester factories is currently on par with the most advanced products from countries such as the United States, Japan, and Western Europe. Products that truly meet all the requirements of national standards can also meet the requirements of international IEC standards.

The core working components of this product are made of multi-element metal oxide powder mainly composed of zinc oxide, which has excellent nonlinear volt ampere characteristics, fast steep wave response, and large current capacity. The products with gaps adopt self blowing gaps and a uniform pressure irradiation structure, which reduces the dispersion of discharge and has a small impact coefficient.

The adoption of composite insulation jackets conforms to the development trend of miniaturization, safety, and maintenance free international power products. Compared with traditional inorganic materials such as ceramics and glass, polymer organic composite materials have the advantages of small volume, light weight, resistance to pollution, cleaning, explosion and vibration, and are the preferred lightning protection components in integrated and modular medium and high voltage transmission and transformation equipment.

Purpose and execution standards

This product is used in AC 220KV and below power generation, transmission, transformation, and distribution systems. It is used to limit the amplitude of lightning and internal operating overvoltage to the specified level, and is the basic equipment for insulation coordination of the entire system. Meanwhile, this product cannot be used to limit resonance overvoltage, and other methods need to be used for system harmonic elimination.

This product model is formulated in accordance with the provisions of JB/T 8459-2006 "Method for Formulating Product Models of Thunder Arresters", and gapless products are formulated in accordance with the standard GB 11032-2000 "Metal Oxide Lightning Arresters without Gaps for AC"; Products with gaps shall comply with the JB/T 9672-2005 standard for metal oxide surge arresters with series gaps. For important parameters and configuration methods that are not clearly defined in the above standards, they shall be revised and executed in accordance with the requirements of DLT620-1997 "Overvoltage Protection and Insulation Coordination of AC Electrical Equipment".

Environmental conditions

◇ The normal usage conditions for conventional products are as follows:
(1) Environmental temperature: not higher than +40℃ and not lower than -40℃;
(2) Altitude: not exceeding 3000m;
(3) Power frequency: 50 ± 2Hz; 60 ± 2Hz;
(4) Maximum wind speed: 35m/s;
(5) Free cleaning conditions: areas with moderate pollution and below;
(6) For seamless products, the long-term application of power frequency voltage shall not exceed the continuous operating voltage of the shelter;
(7) For products with gaps, the short-term increase in power frequency voltage at the installation point shall not exceed the rated voltage of the lightning arrester.

◇ Lightning arresters need to be specially made for long-term use under the following abnormal conditions, and should be specified when ordering:
(1) Temperature or altitude exceeding the standard (such as in high-altitude, tropical, cold regions, fully enclosed cabinets, near electric furnaces, etc.);
(2) The usage environment contains severe moisture or corrosive gas impurities (such as water, salt fields, chemical plants, etc.);
(3) Strong ultraviolet radiation (such as in high-altitude, dry and early areas with strong sunlight, etc.);
(4) Extremely polluted areas (such as mining working faces, construction site working faces, etc.).

Model and meaning

The model definition of this product fully complies with the provisions of JB/T 8459-2006 "Method for Compiling Lightning Arrester Product Models". The specific model description is as follows:

YH	□	□	□	□ - □ / □	□
Composite jacket insulation and oxide valve plate	Nominal discharge current (kA)	Structure characteristics W-No gap C-series clearance B-parallel clearance	Place of use S-distribution type Z-power station type R-capacitive D-motor type T-railway L-DC type X-line type F-GIS type O-oil type	Design serial number (customized by the manufacturer) / Rated voltage of lightning arrester (kV) / Maximum residual voltage under nominal discharge current (kV)	Additional feature codes G-plateau type W-anti fouling type K-seismic type T-humid heat type

Typical technical parameter table, physical pictures, and installation dimensions of conventional products

The following is a typical parameter table for conventional lightning arresters, arranged in descending order of voltage levels for easy user search.

Note:

- ◇ Each national standard model can derive several models of products, limited by space and not listed one by one. If users have any questions about the model, they can directly consult our company's technical department;
- ◇ The data marked with * in the "nominal voltage of the system" column represents the rated voltage of the motor corresponding to the motor protection lightning arrester;
  The data marked with * in the "Power Frequency Discharge Voltage" column represents the effective value of the power frequency withstand voltage of high-voltage lightning arresters above 110KV;
- ◇ Due to its various uses and voltage levels, the impulse current value corresponding to the 30/60 operation impulse residual voltage of the lightning arrester is not specifically specified;
- ◇ The vast majority of products can be equipped with accessories such as detachers and counters, with an "L" added to the etacher and a "J" added to the counter after the model.

General table of parameters for composite coat lightning arresters

Low pressure	Distribution type	System nominal voltage (kV) Effective value	National standard model of lightning arrester	Rated voltage of lightning arrester (kV) Effective value	Gapless lightning arrester			Gap lightning arrester			Residual pressure (kV) (Peak value) Not less than			2000 μ s square wave current capacity (A)	4/10 high current tolerance (kA)
					Continuous operating voltage of lightning arrester (kV) Effective value	DC 1mA reference voltage (kV) Not less than	Maximum leakage at 0.75 times DC reference voltage (μ A)	Power frequency discharge voltage (kV) Effective value Not less than	1.2/50 impulse discharge voltage (kV) Peak value Not less than	Maximum conductive current (μ A)	Under lightning impulse current on 8/20	Under 30/60 operating impulse current	Under 1/4 steep wave impulse current		
Low pressure	Distribution type	0.22	YH1.5W-0.28/1.3	0.28	0.24	0.6	50	–	–	–	1.3	–	–	75	25
		0.38	YH1.5W-0.5/2.6	0.5	0.42	1.2	50	–	–	–	2.6	–	–	75	25
	Motor type	0.66*	YH2.5WD-1.3/3.6	1.3	0.95	1.8	50	–	–	–	3.6	–	–	200	40
		1.14*	YH2.5WD-2.6/7.2	2.6	1.9	3.6	50	–	–	–	7.2	–	–	200	40
3kV	Distribution type	3	YH5WS-3.8/15	3.8	2.0	7.5	50	–	–	–	15.0	12.8	17.3	75	40
		3	YH5WS-5/15	5	4.0	7.5	50	–	–	–	15.0	12.8	17.3	75	40
		3	YH5CS-3.8/13.5	3.8	–	–	–	9.0	13.5	20	13.5	11.4	15.0	75	40
	Power station type	3	YH5WZ-3.8/13.5	3.8	2.0	7.2	50	–	–	–	13.5	11.5	15.5	200	65
		3	YH5WZ-5/13.5	5	4.0	7.2	50	–	–	–	13.5	11.5	15.5	200	65
		3	YH5CZ-3.8/12.0	3.8	–	–	–	8.0	12.0	20	12.0	10.2	13.5	200	65
	Capacitive type	3	YH5WR-3.8/13.5	3.8	2.0	7.2	50	–	–	–	13.5	10.5	–	400	65
		3	YH5WR-5/13.5	5	4.0	7.2	50	–	–	–	13.5	10.5	–	400	65
		3	YH5CR-3.8/12.0	3.8	–	–	–	8.0	12.0	20	12.0	9.6	–	400	65
	Generator type	3.15*	YH5WD-3.8/9.5	3.8	2.0	5.7	50	–	–	–	9.5	7.6	10.7	400	65
		3.15*	YH5WD-4/9.5	4	3.15	5.7	50	–	–	–	9.5	7.6	10.7	400	65
		3.15*	YH5CD-3.8/8.6	3.8	–	–	–	7.5	8.6	20	8.6	6.9	9.8	400	65
	Electric motor type	3.15*	YH2.5WD-3.8/9.5	3.8	2.0	5.7	50	–	–	–	9.5	7.6	10.7	200	65
		3.15*	YH2.5WD-4/9.5	4	3.15	5.7	50	–	–	–	9.5	7.6	10.7	200	65
		3.15*	YH2.5CD-3.8/8.6	3.8	–	–	–	7.5	8.6	20	8.6	6.9	9.8	200	65
	Neutral point type	3.15*	YH1.5W-2.4/6	2.4	1.9	3.4	50	–	–	–	6.0	5.0	–	200	65

Low pressure	Distribution type	System nominal voltage (kV) Effective value	National standard model of lightning arrester	Rated voltage of lightning arrester (kV) Effective value	Gapless lightning arrester			Gap lightning arrester			Residual pressure (kV) (Peak value) Not less than			2000 μ s square wave current capacity (A)	4/10 high current tolerance (kA)
					Continuous operating voltage of lightning arrester (kV) Effective value	DC 1mA reference voltage (kV) Not less than	Maximum leakage at 0.75 times DC reference voltage (μ A)	Power frequency discharge voltage (kV) Effective value Not less than	1.2/50 impulse discharge voltage (kV) Peak value Not less than	Maximum conductive current (μ A)	Under lightning impulse current on 8/20	Under 30/60 operating impulse current	Under 1/4 steep wave impulse current		
6kV	Distribution type	6	YH5WS-7.6/30	7.6	4.0	15.0	50	–	–	–	30.0	25.6	34.6	75	40
		6	YH5WS-10/30	10	8.0	15.0	50	–	–	–	30.0	25.6	34.6	75	40
		6	YH5CS-7.6/27	7.6	–	–	–	16.0	27.0	20	27.0	22.5	30.0	75	40
	Power station type	6	YH5WZ-7.6/27	7.6	4.0	14.4	50	–	–	–	27.0	23.0	31.0	200	65
		6	YH5WZ-10/27	10	8.0	14.4	50	–	–	–	27.0	23.0	31.0	200	65
		6	YH5CZ-7.6/24	7.6	–	–	–	16.0	24.0	20	24.0	20.4	27.0	200	65
	Capacitive type	6	YH5WR-7.6/27	7.6	4.0	14.4	50	–	–	–	27.0	21.0	–	400	65
		6	YH5WR-10/27	10	8.0	14.4	50	–	–	–	27.0	21.0	–	400	65
		6	YH5CR-7.6/24	7.6	–	–	–	16.0	24.0	20	24.0	19.5	–	400	65
	Generator type	6.3*	YH5WD-7.6/18.7	7.6	4.0	11.2	50	–	–	–	18.7	15.0	21.0	400	65
		6.3*	YH5WD-8/18.7	8	6.3	11.2	50	–	–	–	18.7	15.0	21.0	400	65
		6.3*	YH5CD-7.6/17	7.6	–	–	–	15.0	17.0	20	17.0	13.8	19.6	400	65
	Electric motor type	6.3*	YH2.5WD-7.6/18.7	7.6	4.0	11.2	50	–	–	–	18.7	15.0	21.0	200	65
		6.3*	YH2.5WD-8/18.7	8	6.3	11.2	50	–	–	–	18.7	15.0	21.0	200	65
		6.3*	YH2.5CD-7.6/17	7.6	–	–	–	15.0	17.0	20	17.0	13.8	19.6	200	65
	Neutral point type	6.3*	YH1.5W-4.8/12	4.8	3.8	6.8	50	–	–	–	12.0	10.0	–	200	65
10kV	Distribution type	10	YH5WS-12.7/50	12.7	6.6	25	50	–	–	–	50	42.5	57.5	75	40
		10	YH5WS-17/50	17	13.6	25	50	–	–	–	50	42.5	57.5	75	40
		10	YH5CS-12.7/45	12.7	–	–	–	26.0	45	20	45	38.4	51.0	75	40
	Power station type	10	YH5WZ-12.7/45	12.7	6.6	24	50	–	–	–	45	38.3	51.8	200	65
		10	YH5WZ-17/45	17	13.6	24	50	–	–	–	45	38.3	51.8	200	65
		10	YH5CZ-12.7/41	12.7	–	–	–	26.0	41	20	41	35.0	46.0	200	65
	Capacitive type	10	YH5WR-12.7/46	12.7	6.6	24	50	–	–	–	46	35.0	–	400	65
		10	YH5WR-17/46	17	13.6	24	50	–	–	–	46	35.0	–	400	65
		10	YH5CR-12.7/41	12.7	–	–	–	26.0	41	20	41	33.0	–	400	65
	Generator type	10.5*	YH5WD-12.7/31	12.7	6.6	18.6	50	–	–	–	31	25	34.7	400	65
		10.5*	YH5WD-13.5/31	13.5	10.5	18.6	50	–	–	–	31	25	34.7	400	65
		10.5*	YH5CD-12.7/28	12.7	–	–	–	25.0	28.0	20	28	22.5	32.0	400	65
		13.8*	YH5WD-17.5/40	17.5	13.8	24.4	50	–	–	–	40.0	32.0	44.8	400	65
		15.75*	YH5WD-20/45	20.0	15.75	28.0	50	–	–	–	45.0	36.0	50.4	400	65
		18.0*	YH5WD-23/51	23.0	18.0	31.9	50	–	–	–	51.0	40.8	57.2	400	65
		20.0*	YH5WD-25/56.2	25.0	20.0	35.4	50	–	–	–	56.2	45.0	62.9	400	65
	Electric motor type	10.5*	YH2.5WD-12.7/31	12.7	6.6	18.6	50	–	–	–	31	25	34.7	200	65
		10.5*	YH2.5WD-13.5/31	13.5	10.5	18.6	50	–	–	–	31	25	34.7	200	65
		10.5*	YH2.5CD-12.7/28	12.7	–	–	–	25.0	28.0	20	28	22.5	32.0	200	65
	Neutral point type	10.5*	YH1.5W-8/191.3	8	6.4	11.4	50	–	–	–	19.0	15.9	–	400	65
		13.8*	YH1.5W-10.5/23	10.5	8.4	14.9	50	–	–	–	23.0	19.2	–	400	65
		15.75*	YH1.5W-12/26	12	9.6	17.0	50	–	–	–	26.0	21.6	–	400	65
		18.0*	YH1.5W-13.7/29.2	13.7	11.0	19.5	50	–	–	–	29.2	24.3	–	400	65
		20.0*	YH1.5W-15.2/31.7	15.2	12.2	21.6	50	–	–	–	31.7	26.4	–	400	65

Low pressure	Distribution type	System nominal voltage (kV) Effective value	National standard model of lightning arrester	Rated voltage of lightning arrester (kV) Effective value	Gapless lightning arrester			Gap lightning arrester			Residual pressure (kV) (Peak value) Not less than			2000 μs square wave current capacity (A)	4/10 high current tolerance (kA)
					Continuous operating voltage of lightning arrester (kV) Effective value	DC 1mA reference voltage (kV) Not less than	Maximum leakage at 0.75 times DC reference voltage (μA)	Power frequency discharge voltage (kV) Effective value Not less than	1.2/50 impulse discharge voltage (kV) Peak value Not less than	Maximum conductive current (μA)	Under lightning impulse current on 8/20	Under 30/60 operating impulse current	Under 1/4 steep wave impulse current		
35kV	Power station type	35	YH5WZ-51/134	51	40.8	73	50	–	–	–	134	114	154	400	65
		35	YH5WZ-42/134	42	23.4	73	50	–	–	–	134	114	154	400	65
		35	YH5CZ-42/124	42	–	–	–	80.0	124	20	124	100	143	400	65
	Capacitive type	35	YH5WR-51/134	51	40.8	73	50	–	–	–	134	105	–	400	65
		35	YH5WR-42/134	42	23.4	73	50	–	–	–	134	105	–	400	65
		35	YH5CR-42/124	42	–	–	–	80.0	124	20	124	100	–	400	65
	Line type	35	YH5WX-51/134	51	40.8	73	50	–	–	–	134	114	154	400	65
		35	YH5WX-54/150	54	43.2	77	50	–	–	–	150	128	169	400	65
		35	YH5CX-42/120	42	–	–	–	80.0	120	20	120	100	138	400	65
		35	YH5CX-42/150	42	–	–	–	80.0	150	20	150	128	169	400	65
	Neutral point type	35	YH1.5W-30/80	30	24	44	50	–	–	–	80	67.5	–	400	65
66kV	Power station type	66	YH5WZ-84/221	84	67.2	121	50	–	–	–	221	188	254	600	65
		66	YH5WZ-90/235	90	72.5	130	50	–	–	–	235	201	270	600	65
		66	YH10WZ-84/221	84	67.2	121	50	–	–	–	221	188	248	600	100
		66	YH10WZ-90/235	90	72.5	130	50	–	–	–	235	201	264	600	100
	Line type	66	YH5WX-96/250	96	75	140	50	–	–	–	250	213	288	600	65
		66	YH5WX-96/275	96	75	154	50	–	–	–	275	234	316	600	65
110kV	Power station type	110	YH5WZ-100/260	100	78	145	50	–	–	–	260	221	299	600	65
		110	YH5WZ-102/266	102	79.6	148	50	–	–	–	266	226	305	600	65
		110	YH5WZ-108/281	108	84	157	50	–	–	–	281	239	323	600	65
		110	YH10WZ-100/260	100	78	145	50	–	–	–	260	221	291	600	100
		110	YH10WZ-102/266	102	79.6	148	50	–	–	–	266	226	297	600	100
		110	YH10WZ-108/281	108	84	157	50	–	–	–	281	239	315	600	100
	Line type	110	YH5WX-108/281	108	84	157	50	–	–	–	281	239	323	600	65
		110	YH5WX-108/309	108	84	173	50	–	–	–	309	263	348	600	65
		110	YH10WX-108/281	108	84	157	50	–	–	–	281	239	315	600	100
		110	YH10WX-108/309	108	84	173	50	–	–	–	309	263	348	600	100
		110	YH5CX-90/260	90	–	130	50	170*	525*	–	260	–	292	600	65
		110	YH10CX-90/260	90	–	130	50	170*	525*	–	260	–	292	600	100
		110	YH10CX-96/280	96	–	140	50	170*	525*	–	280	–	314	600	100
		110	YH10CX-102/296	102	–	148	50	170*	525*	–	296	–	332	600	100
	Neutral point type	110	YH1.5W-60/144	60	48	85	50	–	–	–	144	135	–	400	65
		110	YH1.5W-72/186	72	58	103	50	–	–	–	186	174	–	400	65
220kV	Power station type	220	YH10WZ-192/500	192	150	280	50	–	–	–	500	426	560	800	100
		220	YH10WZ-200/520	200	156	290	50	–	–	–	520	442	582	800	100
		220	YH10WZ-204/532	204	159	296	50	–	–	–	532	452	594	800	100
		220	YH10WZ-216/562	216	168.5	314	50	–	–	–	562	478	630	800	100
	Line type	220	YH10WX-216/562	216	168	314	50	–	–	–	562	478	630	600	100
		220	YH10WX-216/618	216	168	346	50	–	–	–	618	526	693	600	100
		220	YH10CX-185/520	180	–	260	50	340*	900*	–	520	–	584	600	100
		220	YH10CX-192/560	192	–	280	50	340*	900*	–	560	–	628	600	100
		220	YH10CX-204/592	204	–	296	50	340*	900*	–	592	–	664	600	100
	Neutral point type	220	YH1.5W-144/320	144	116	205	50	–	–	–	320	299	–	600	65
27.5kV	Railway type	27.5	YH5WT-42/120	42	34	65	50	–	–	–	120	98	138	400	65
55kV		55	YH5WT-84/240	84	68	130	50	–	–	–	240	276	276	400	65

D



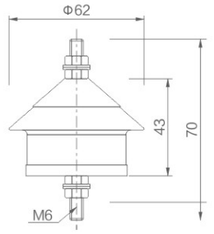

Low pressure 220V YH1.5W-0.28/1.3
380V YH1.5W-0.5/2.6 660V YH1.5W-0.9/3.9



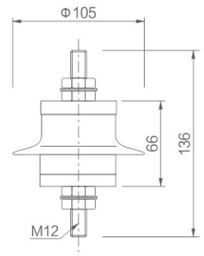

Low voltage electrical models YH2.5WD-1.3/3.6
YH2.5WD-2.6/7.2



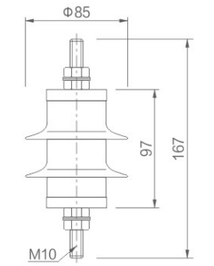

3kV distribution type YH5WS-3.8/15
YH5WS-5/15



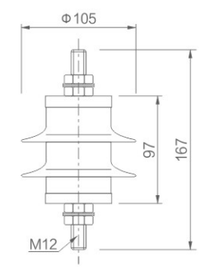

3kV power station type YH5WZ-3.8/13.5
YH5WZ-5/13.5



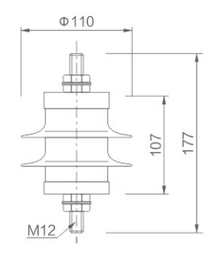

3kV capacitor, motor type YH5WR-3.8(5)/13.5
YH2.5WD-4/9.5



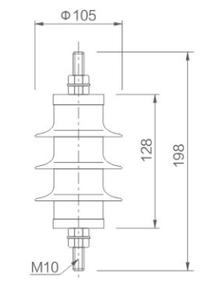

6kV distribution type YH5WS-7.6/30
YH5WS-10/30



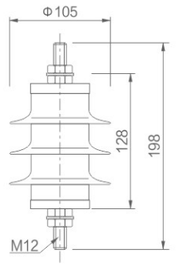

6kV power station type YH5WZ−7.6/27 YH5WZ−10/27



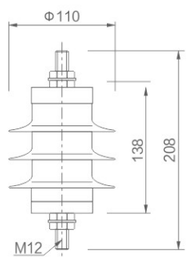

6kV capacitor, motor type YH5WR−7.6(10)/27 YH2.5WD−8/18.7



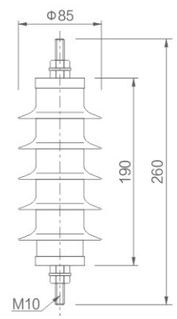

10kV distribution type YH5WS−12.7(16.5)/50 YH5WS−17/50



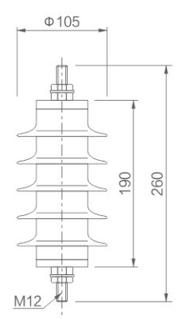

10kV power station type YH5WZ−12.7(16.5)/45 YH5WZ−17/45



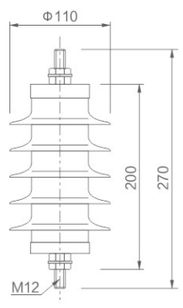

10kV capacitor, rotating motor YH5WR−12.7(17)/45 YH2.5WD−17.5/40



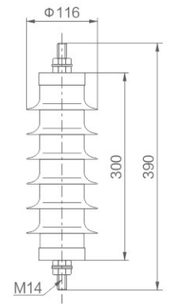

Special generator models YH5WD−20/45 YH5WD−23/51 YH5WD−25/56.2

D

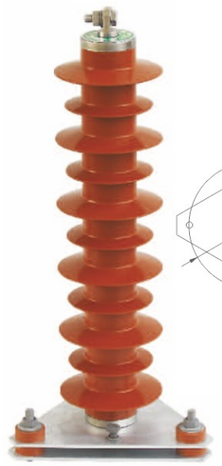

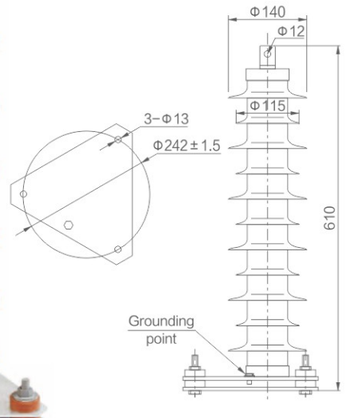

35kV power station type YH5WZ−42/134,51/134,54/134



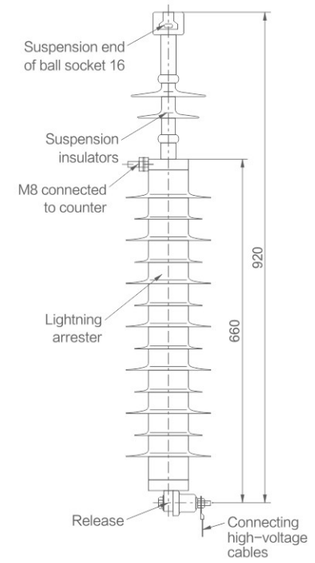

35kV line type YH5WX−51/134TLB

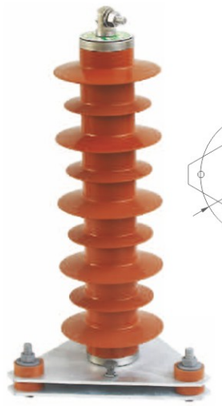

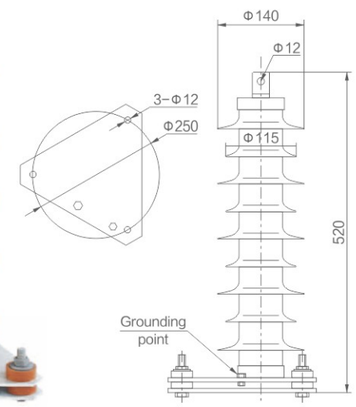

Neutral point type YH1.5W−33/85 YH1.5W−42/102

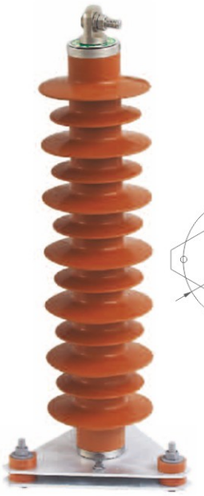

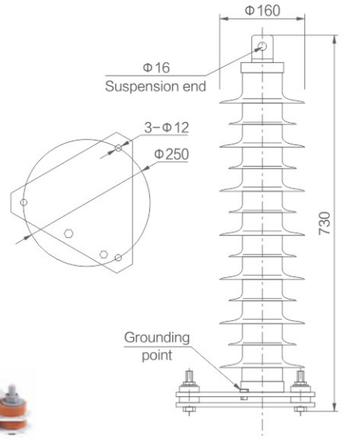

Neutral point type YH1.5W−60/144 YH1.5W−72/186



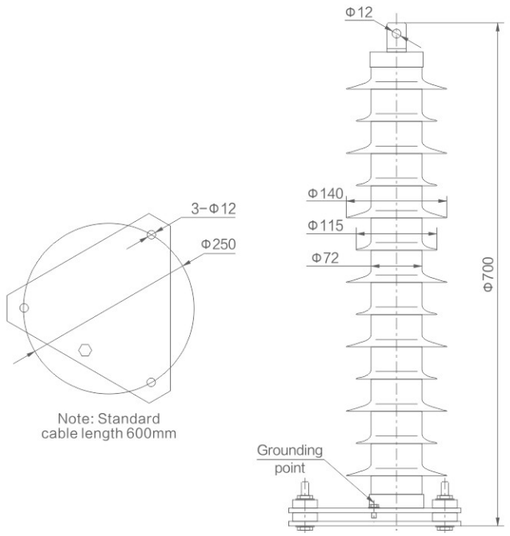

35kV high prototype YH5WZ-51/134GY



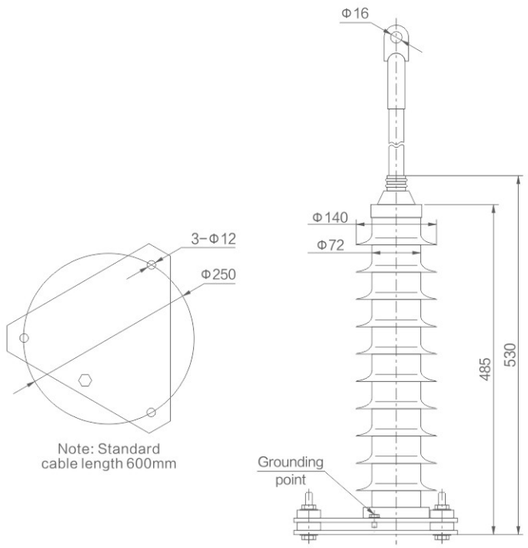

35kV fully insulated type YH5WZ-51/134Q

D



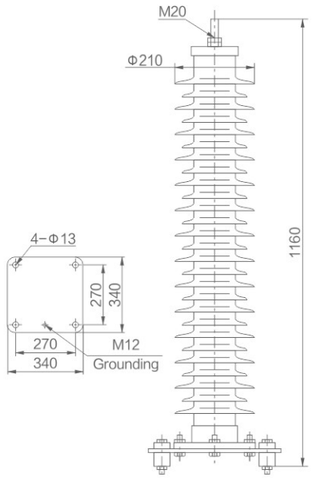



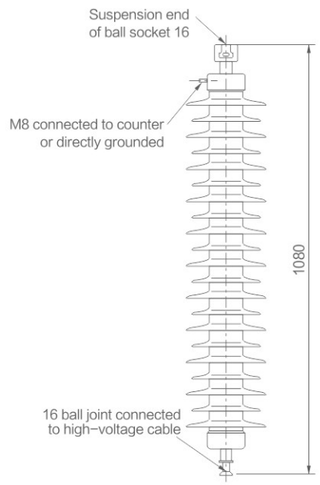

66kV power station type YH5W-84/221 YH5W-90/224 YH5W-96/250 YH5W-90/235

66kV line type YH5WX-96/250 YH5WX-96/275



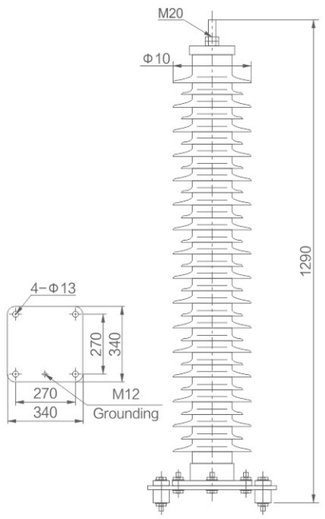



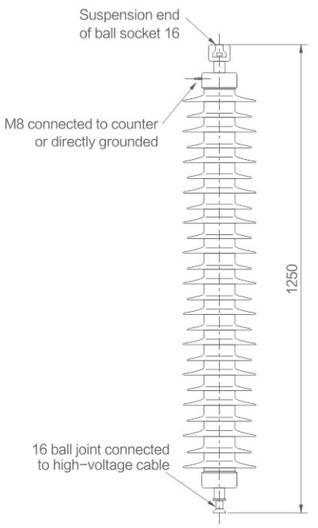

110kV power station type YH5WZ-100/260 YH5WZ-108/281 YH10WZ-100/260 YH10WZ-108/281

110kV line type YH5WX-96/250 YH5WX-108/281 YH10WX-96/250 YH10WX-108/281



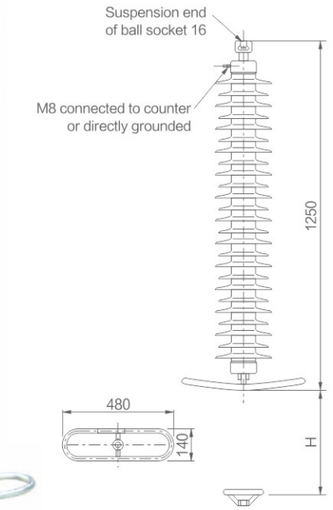

110kV with gap, line type YH5CX−96/280K YH10CX−96/280K
YH10CX−108/320K



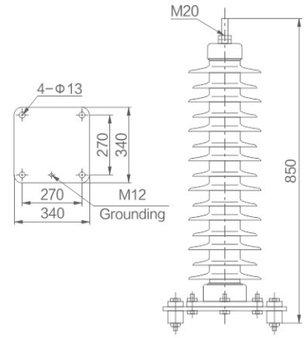

110kV neutral point type YH1.5W−60/144
YH1.5W−72/186

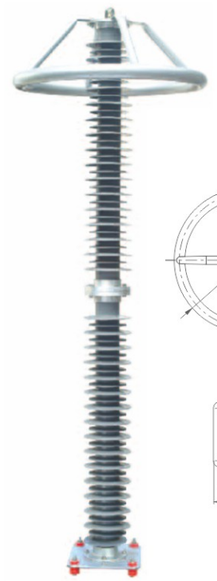

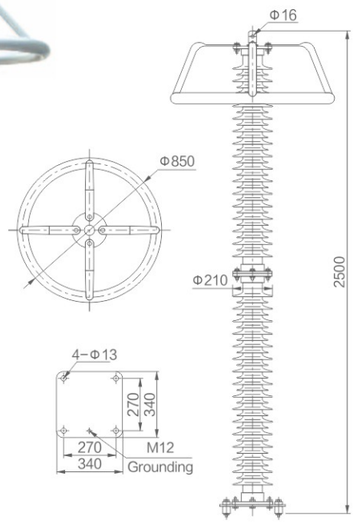

220kV power station type YH10WZ−192/500 YH10WZ−200/520
YH10WZ−204/532 YH10WZ−216/562

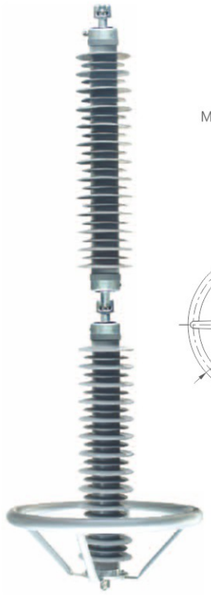

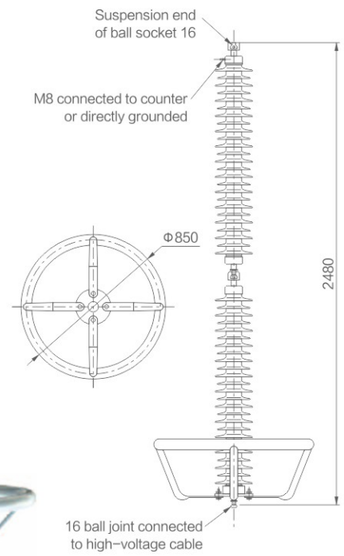

220kV line type YH10WX−216/562
YH10WX−216/618

D



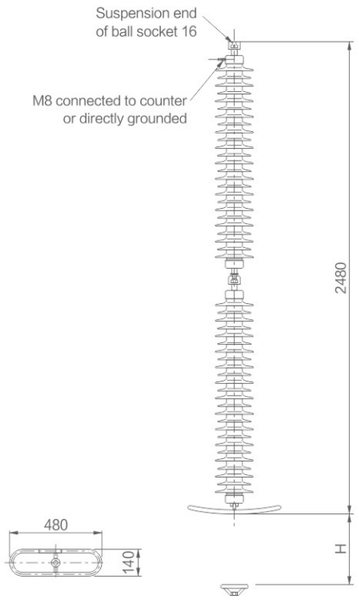

220kV with gap, line type YH10CX−180/520K YH10CX−192/560K
YH10CX−216/640K



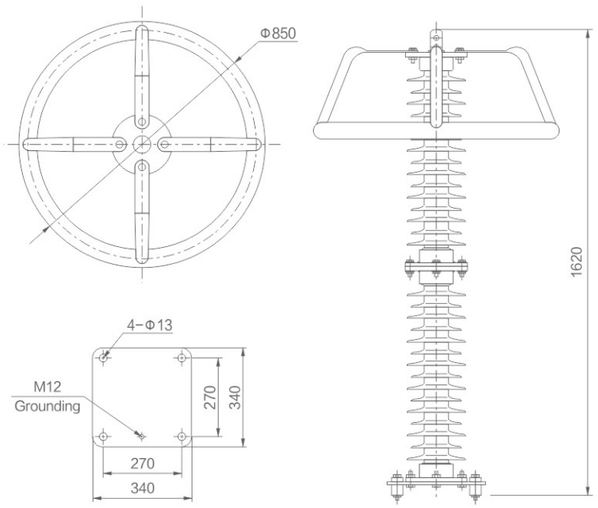

220kV neutral point type YH1.5W−144/320

D

Lightning arrester series

Professional manufacturer

>>> you can count on >>>

DGG®
DENGGAO ELECTRIC

YH series

Composite jacket lightning arrester



Overview

Lightning arrester is the foundation of insulation coordination for various electrical equipment in the power system, such as transformers, reactors, capacitors, generators, motors, PT, CT, circuit breakers, contactors, etc. The protection performance of lightning arrester determines the internal and external insulation indicators of all electrical equipment in the power system, such as short-term power frequency withstand voltage, lightning impulse withstand voltage, and operating impulse withstand voltage.

The ceramic insulation jacket of our company's metal oxide lightning arrester is formed by isostatic pressing method, with high density and good electrical insulation. Equipped with unique sealing technology and pressure relief device, it is safe and reliable, and widely used in various power places. The porcelain jacket lightning arrester has a long service life and good texture, making it an ideal product that combines durability and aesthetics.

The porcelain jacket metal oxide lightning arrester is the most advanced product among conventional lightning arresters internationally, with excellent nonlinear volt ampere characteristics, fast steep wave response, and large current capacity. After the comprehensive introduction of zinc oxide technology in the mid-1980s in China, through years of practice and digestion, the performance of AC lightning arresters in various professional lightning arrester factories is not significantly different from the most advanced products in countries such as the United States, Japan, and Western Europe. Products that truly meet all the requirements of national standards can also meet all the requirements of international IEC standards.

The porcelain jacket silicon carbide valve type lightning arrester is a complete series of independent technology lightning arresters developed and produced by Chinese lightning arrester researchers. This product fully combines the actual situation of China's power grid at that time, and the ceramic blowing gap series products have a performance that is still not inferior to the metal oxide lightning arrester advocated by developed countries such as the United States and Japan. It is a proud technological achievement in the independent industrialization process of New China.

Y/F series

Porcelain jacket lightning arrester

DGG®
DENGGAO ELECTRIC

D

Purpose and execution standards

This product is used in AC 220KV and below power generation, transmission, transformation, and distribution systems. Its function is to limit the amplitude of lightning and internal operating overvoltage to the specified level, and it is the basic equipment for insulation coordination of the entire system. Meanwhile, this product cannot be used to limit resonance overvoltage, and other methods need to be used for system harmonic elimination.

This product model is formulated in accordance with JB/T 8459-2006 "Method for Formulating Lightning Arrester Product Models", and the gapless oxide lightning arrester product follows the GB/T 11032-2000 "AC gapless metal oxide lightning arrester" standard; The gap oxide lightning arrester products shall comply with the JB/T 9672-2005 standard for metal oxide lightning arresters with series gaps; The ceramic blown silicon carbide valve type lightning arrester shall comply with the standard GB/T 7327-2008 "Silicon carbide valve type lightning arrester for AC systems". For important parameters and configuration methods that are not clearly defined in the above standards, they shall be revised and executed in accordance with the requirements of DL/T620-1997 "Overvoltage Protection and Insulation Coordination of AC Electrical Equipment".

Environmental conditions

◇ The normal usage conditions for conventional products are as follows:

(1) Environmental temperature: not higher than +40℃ and not lower than -40℃;

(2) Altitude: not exceeding 3000m;

(3) Power frequency: 50 ± 2Hz; 60 ± 2Hz;

(4) Maximum wind speed: 35m/s;

(5) For gapless oxide products, the long-term applied power frequency voltage shall not exceed the continuous operating voltage of the lightning arrester;

(6) For products with gap oxides, the short-term power frequency voltage increase at the installation point shall not exceed the rated voltage of the lightning arrester;

(7) For ceramic blowing valve type silicon carbide products, the short-term increase in power frequency voltage at the installation point shall not exceed the arc extinguishing voltage of the lightning arrester.

◇ Lightning arresters need to be specially made for long-term use under the following abnormal conditions, and should be specified when ordering:

(1) Temperature or altitude exceeding the standard (such as in high-altitude, tropical, cold regions, fully enclosed cabinets, near electric furnaces, etc.);

(2) The usage environment contains severe moisture or corrosive gas impurities (such as water, salt fields, chemical plants, etc.);

(3) Strong ultraviolet radiation (such as in high-altitude, dry areas with strong sunlight, etc.);

(4) Extremely polluted areas (such as mining working faces, construction site working faces, etc.).

Model and meaning

The model definition of this product fully complies with the provisions of JB/T 8459-2006 "Method for Compiling Lightning Arrester Product Models". The specific model description is as follows:

Y	□	□	□	□ – □ / □	□
Oxide repellent (Silicon carbide valve type is represented by F)	Nominal discharge current (kA)	Structure characteristics W-No gap C-series clearance B-parallel clearance C for valve products represents the ceramic blowing gap	Place of use S-distribution type Z-power station type R-capacitive D-motor type T-railway L-DC type X-line type F-GIS type O-oil type	Design serial number (customized by the manufacturer)	Rated voltage of lightning arrester (kV) Maximum residual voltage under nominal discharge current (kV)	Additional feature codes G-plateau type W-anti fouling type K-seismic type T-humid heat type

Typical technical parameter table, physical pictures, and installation dimensions of conventional products

Note:

- ◇ Each national standard model can derive several models of products, limited by space and not listed one by one. If users have any questions about the models, they can directly consult our company's technical department.
- ◇ The data marked with * in the "System nominal voltage" column represents the rated voltage of the motor corresponding to the motor protection type lightning arrester.
- ◇ Due to its various uses and voltage levels, the impulse current value corresponding to the 30/60 operation impulse residual voltage of the lightning arrester is not specifically specified.
- ◇ The data marked with * in the "Rated Voltage of Lightning Arrester" column represents the arc extinguishing voltage of the ceramic blown silicon carbide valve type lightning arrester.
- ◇ The vast majority of products can be equipped with detachable devices, counters and other accessories, with detachable devices added with "L" and counters added with "J" after the model.

General table of parameters for composite coat lightning arresters

Low pressure	Distribution type	System nominal voltage (kV) Effective value	National standard model of lightning arrester	Rated voltage of lightning arrester (kV) Effective value	Gapless lightning arrester			Gap lightning arrester			Residual pressure (kV) (Peak value) Not less than			2000 μs square wave current capacity (A)	4/10 high current tolerance (kA)
					Continuous operating voltage of lightning arrester (kV) Effective value	DC 1mA reference voltage (kV) Not less than	Maximum leakage at 0.75 times DC reference voltage (μA)	Power frequency discharge voltage (kV) Effective value Not less than	1.2/50 impulse discharge voltage (kV) Peak value Not less than	Maximum conductive current (μA)	Under lightning impulse current on 8/20	Under 30/60 operating impulse current	Under 1/4 steep wave impulse current		
Low pressure	Distribution type	0.22	Y1.5W-0.28/1.3	0.28	0.24	0.6	50	–	–	–	1.3	–	–	75	25
		0.38	Y1.5W-0.5/2.6	0.5	0.42	1.2	50	–	–	–	2.6	–	–	75	25
3kV	Distribution type	3	Y5WS-3.8/15	3.8	2.0	7.5	50	–	–	–	15.0	12.8	17.3	75	40
		3	Y5WS-5/15	5	4.0	7.5	50	–	–	–	15.0	12.8	17.3	75	40
		3	Y5CS-3.8/13.5	3.8	–	–	–	9.0	13.5	20	13.5	11.4	15.0	75	40
	Power station type	3	Y5WZ-3.8/13.5	3.8	2.0	7.2	50	–	–	–	13.5	11.5	15.5	200	65
		3	Y5WZ-5/13.5	5	4.0	7.2	50	–	–	–	13.5	11.5	15.5	200	65
		3	Y5CZ-3.8/12.0	3.8	–	–	–	8.0	12.0	20	12.0	10.2	13.5	200	65
	Capacitive type	3	Y5WR-3.8/13.5	3.8	2.0	7.2	50	–	–	–	13.5	10.5	–	400	65
		3	Y5WR-5/13.5	5	4.0	7.2	50	–	–	–	13.5	10.5	–	400	65
		3	Y5CR-3.8/12.0	3.8	–	–	–	8.0	12.0	20	12.0	9.6	–	400	65
	Generator type	3.15*	Y5WD-3.8/9.5	3.8	2.0	5.7	50	–	–	–	9.5	7.6	10.7	400	65
		3.15*	Y5WD-4/9.5	4	3.15	5.7	50	–	–	–	9.5	7.6	10.7	400	65
		3.15*	Y5CD-3.8/8.6	3.8	–	–	–	7.5	8.6	20	8.6	6.9	9.8	400	65
	Electric motor type	3.15*	Y2.5WD-3.8/9.5	3.8	2.0	5.7	50	–	–	–	9.5	7.6	10.7	200	65
		3.15*	Y2.5WD-4/9.5	4	3.15	5.7	50	–	–	–	9.5	7.6	10.7	200	65
		3.15*	Y2.5WD-3.8/8.6	3.8	–	–	–	7.5	8.6	20	8.6	6.9	9.8	200	65
	Neutral point type	3.15*	Y1.5W-2.4/6	2.4	1.9	3.4	50	–	–	–	6.0	5.0	–	400	65
6kV	Distribution type	6	Y5WS-7.6/30	7.6	4.0	15.0	50	–	–	–	30.0	25.6	34.6	75	40
		6	Y5WS-10/30	10	8.0	15.0	50	–	–	–	30.0	25.6	34.6	75	40
		6	Y5CS-7.6/27	7.6	–	–	–	16.0	27.0	20	27.0	22.5	30.0	75	40
	Power station type	6	Y5WZ-7.6/27	7.6	4.0	14.4	50	–	–	–	27.0	23.0	31.0	200	65
		6	Y5WZ-10/27	10	8.0	14.4	50	–	–	–	27.0	23.0	31.0	200	65
		6	Y5CZ-7.6/24	7.6	–	–	–	16.0	24.0	20	24.0	20.4	27.0	200	65
	Capacitive type	6	Y5WR-7.6/27	7.6	4.0	14.4	50	–	–	–	27.0	21.0	–	400	65
		6	Y5WR-10/27	10	8.0	14.4	50	–	–	–	27.0	21.0	–	400	65
		6	Y5WR-7.6/24	7.6	–	–	–	16.0	24.0	20	24.0	19.5	–	400	65
	Generator type	6.3*	Y5WD-7.6/18.7	7.6	4.0	11.2	50	–	–	–	18.7	15.0	21.0	400	65
		6.3*	Y5WD-8/18.7	8	6.3	11.2	50	–	–	–	18.7	15.0	21.0	400	65
		6.3*	Y5CD-7.6/17	7.6	–	–	–	15.0	17.0	20	17.0	13.8	19.6	400	65
	Electric motor type	6.3*	Y2.5WD-7.6/18.7	7.6	4.0	11.2	50	–	–	–	18.7	15.0	21.0	200	65
		6.3*	Y2.5WD-8/18.7	8	6.3	11.2	50	–	–	–	18.7	15.0	21.0	200	65
		6.3*	Y2.5CD-7.6/17	7.6	–	–	–	15.0	17.0	20	17.0	13.8	19.6	200	65
	Neutral point type	6.3*	Y1.5W-4.8/12	4.8	3.8	6.8	50	–	–	–	12.0	10.0	–	400	65

Low pressure	Distribution type	System nominal voltage (kV) Effective value	National standard model of lightning arrester	Rated voltage of lightning arrester (kV) Effective value	Gapless lightning arrester			Gap lightning arrester			Residual pressure (kV) (Peak value) Not less than			2000 μs square wave current capacity (A)	4/10 high current tolerance (kA)
					Continuous operating voltage of lightning arrester (kV) Effective value	DC 1mA reference voltage (kV) Not less than	Maximum leakage at 0.75 times DC reference voltage (μA)	Power frequency discharge voltage (kV) Effective value Not less than	1.2/50 impulse discharge voltage (kV) Peak value Not less than	Maximum conductive current (μA)	Under lightning impulse current on 8/20	Under 30/60 operating impulse current	Under 1/4 steep wave impulse current		
10kV	Distribution type	10	Y5WS-12.7/50	12.7	6.6	25	50	–	–	–	50	42.5	57.5	75	40
		10	Y5WS-17/50	17	13.6	25	50	–	–	–	50	42.5	57.5	75	40
		10	Y5CS-12.7/45	12.7	–	–	–	26.0	45	20	45	38.4	51.0	75	40
	Power station type	10	Y5WZ-12.7/45	12.7	6.6	24	50	–	–	–	45	38.3	51.8	200	65
		10	Y5WZ-17/45	17	13.6	24	50	–	–	–	45	38.3	51.8	200	65
		10	Y5CZ-12.7/41	12.7	–	–	–	26.0	41	20	41	35.0	46.0	200	65
	Capacitive type	10	Y5WR-12.7/46	12.7	6.6	24	50	–	–	–	46	35.0	–	400	65
		10	Y5WR-17/46	17	13.6	24	50	–	–	–	46	35.0	–	400	65
		10	Y5CR-12.7/41	12.7	–	–	–	26.0	41	20	41	33.0	–	400	65
	Generator type	10.5*	Y5WD-12.7/31	12.7	6.6	18.6	50	–	–	–	31	25	34.7	400	65
		10.5*	Y5WD-13.5/31	13.5	13.6	18.6	50	–	–	–	31	25	34.7	400	65
		10.5*	Y5CD-12.7/28	12.7	–	–	–	25.0	28.0	20	28	22.5	32.0	400	65
		13.8*	Y5WD-17.5/40	17.5	13.8	24.4	50	–	–	–	40.0	32.0	44.8	400	65
		15.75*	Y5WD-20/45	20.0	15.75	28.0	50	–	–	–	45.0	36.0	50.4	400	65
	Electric motor type	10.5*	Y2.5WD-12.7/31	12.7	6.6	18.6	50	–	–	–	31	25	34.7	200	65
		10.5*	Y2.5WD-13.5/31	13.5	10.5	18.6	50	–	–	–	31	25	34.7	200	65
		10.5*	Y2.5CD-12.7/28	12.7	–	–	–	25.0	28.0	20	28	22.5	32.0	200	65
	Neutral point type	10.5*	Y1.5W-8/19	8	6.4	11.4	50	–	–	–	19.0	15.9	–	400	65
		13.8*	Y1.5W-10.5/23	10.5	8.4	14.9	50	–	–	–	23.0	19.2	–	400	65
		15.75*	Y1.5W-12/26	12	9.6	17.0	50	–	–	–	26.0	21.6	–	400	65
		18.0*	Y1.5W-13.7/29.2	13.7	11.0	19.5	50	–	–	–	29.2	24.3	–	400	65
		20.0*	Y1.5W-15.2/31.7	15.2	12.2	21.6	50	–	–	–	31.7	26.4	–	400	65
35kV	Power station type	35	Y5WZ-51/134	51	40.8	73	50	–	–	–	134	114	154	400	65
		35	Y5CZ-42/124	42	–	–	–	80.0	124	20	124	100	143	400	65
		35	Y5WZ-42/134	42	23	73	50	–	–	–	134	114	154	400	65
	Capacitive type	35	Y5WR-51/134	51	40.8	73	50	–	–	–	134	105	–	400	65
		35	Y5CR-42/124	42	–	–	–	80.0	124	20	124	100	–	400	65
		35	Y5WR-42/134	42	23.4	73	50	–	–	–	134	105	–	400	65
	Neutral point type	35	Y1.5W-30/80	30	24	44	50	–	–	–	80	67.5	–	400	65
66kV	Power station type	66	Y5WZ-84/221	84	67.2	121	50	–	–	–	221	188	254	600	65
		66	Y5WZ-90/235	90	72.5	130	50	–	–	–	235	201	270	600	65
		66	Y10WZ-84/221	84	67.2	121	50	–	–	–	221	188	248	600	100
		66	Y10WZ-90/235	90	72.5	130	50	–	–	–	235	201	264	600	100

Low pressure	Distribution type	System nominal voltage (kV) Effective value	National standard model of lightning arrester	Rated voltage of lightning arrester (kV) Effective value	Gapless lightning arrester			Gap lightning arrester			Residual pressure (kV) (Peak value) Not less than			2000 μs square wave current capacity (A)	4/10 high current tolerance (kA)
					Continuous operating voltage of lightning arrester (kV) Effective value	DC 1mA reference voltage (kV) Not less than	Maximum leakage at 0.75 times DC reference voltage (μA)	Power frequency discharge voltage (kV) Effective value Not less than	1.2/50 impulse discharge voltage (kV) Peak value Not less than	Maximum conductive current (μA)	Under lightning impulse current on 8/20	Under 30/60 operating impulse current	Under 1/4 steep wave impulse current		
110kV	Power station type	110	Y5WZ-100/260	100	78	145	50	–	–	–	260	221	299	600	65
		110	Y5WZ-102/266	102	79.6	148	50	–	–	–	266	226	305	600	65
		110	Y5WZ-108/281	108	84	157	50	–	–	–	281	239	323	600	65
		110	Y10WZ-100/260	100	78	145	50	–	–	–	260	221	291	600	100
		110	Y10WZ-102/266	102	79.6	148	50	–	–	–	266	226	297	600	100
		110	Y10WZ-108/281	108	84	157	50	–	–	–	281	239	315	600	100
	Neutral point type	110	Y1.5W-60/144	60	48	85	50	–	–	–	144	135	–	400	65
		110	Y1.5W-72/186	72	58	103	50	–	–	–	186	174	–	400	65
27.5kV	Railway type	27.5	Y5WT-42/120	42	37	65	50	–	–	–	120	98	138	400	65
55kV		55	Y5WT-84/240	84	68	130	50	–	–	–	240	196	276	400	65
Porcelain blow valve type	Motor type	6.3*	FCD3-6	7.6*	–	–	–	15	19	30	19	–	–	400	65
		10.5*	FCD3-10	12.7*	–	–	–	25	31	30	31	–	–	400	65



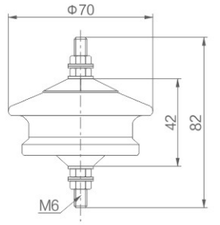

Low voltage distribution type(220V/380V)
Y1.5W-0.28/1.3 Y1.5W-0.5/2.6



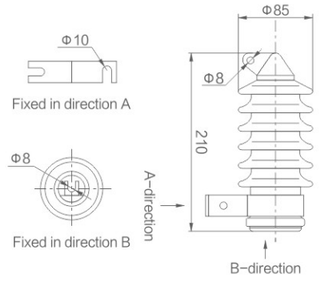

6kV distribution type
Y5WS-7.6/30 Y5WS-10/30



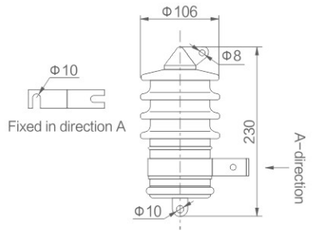

6kV Power station type Y5WZ−7.6(10)/27
Capacitive type Y5WR−7.6(10)/27



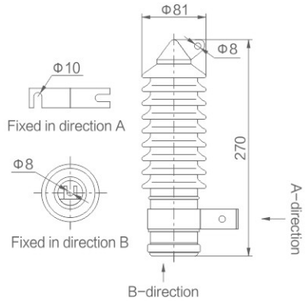

10kV Distribution type
Y5WS−12.7/50 Y5WS−17/50



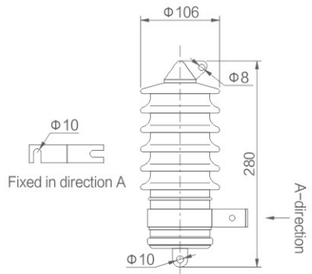

10kV Power station type Y5WZ−12.7(17)/45
Capacitive type Y5WR−12.7(17)/45



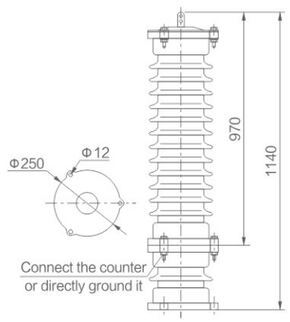

35kV Power station type Y5WZ−42(51)/134
Capacitive type Y5WR−42(51)/134



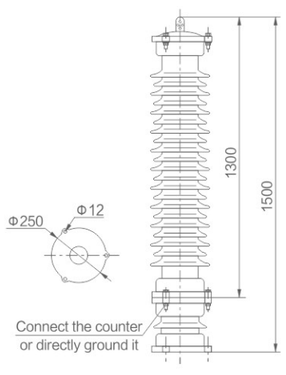

66kV power station type Y5WZ−90/235
Y10WZ−96/250



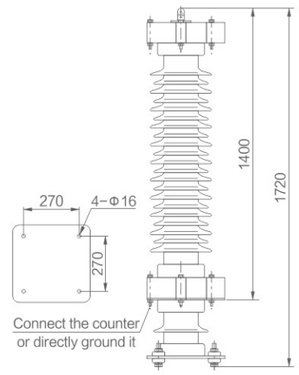

110kV power station type Y5WZ−108/281
Y10WZ−108/281



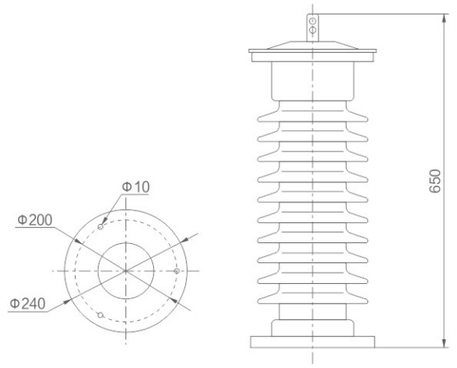

35kV neutral point type Y1.5W−30/80



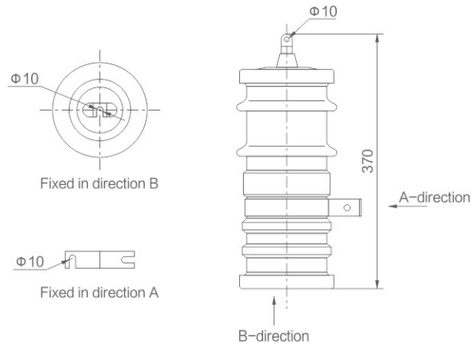

FCD−6kV motor type FCD3−7.6/19



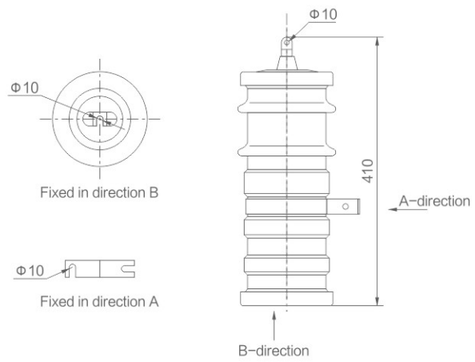

FCD−10kV motor type FCD3−12.7/31

D

Lightning arrester series

Professional manufacturer

>>> you can count on >>>

DGG®
DENGGAO ELECTRIC

YH series

The metal oxide
Surge arrester

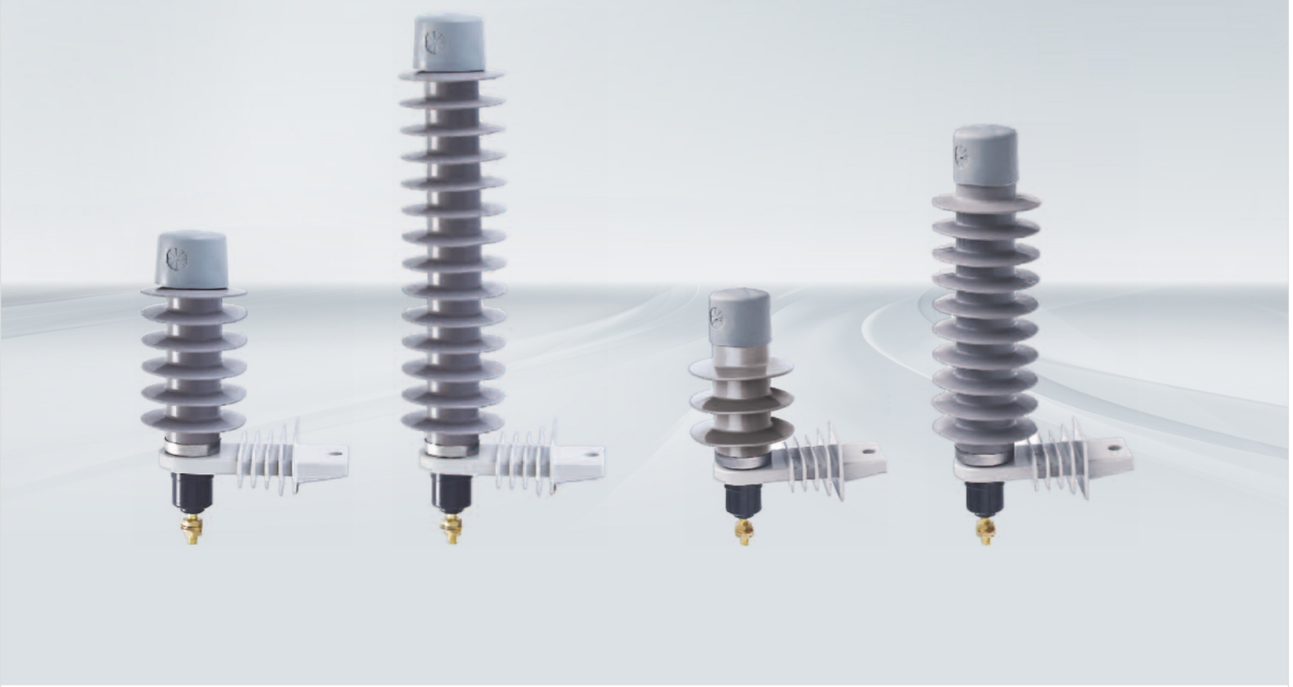

Overview

The metal oxide surge arrester (MOA) is the most advanced over-voltage protector in the word. The metal oxide valistors (MOV), as the core organ, made under Japanese technology license. It have good response to steep front surge, excellent volt-ampere characteristics and high discharge capability, which provides a very consistent protection merit at steep front surge, lightning surge and switching surge, and enhances protective capability.

The product has been confirms by the Chinese national center for guality supervision and test of insulators and surge arresters. The technical perfomance of the product conforms to IEC60099-4 standard technical requirements.

DGG®
DENGGAO ELECTRIC

Model and meaning

Y	H	□	□	-	□	□
Polymeric housed metal oxide type	Rated discharge current (kA)	Disign feature W: without gaps	Rated voltage of MOA (kV)		L: disconnector	Additional feature

The birief introduction of an arrester disconnector

Every polymeric housed MOA puts up the disconnector. The disconnector is equipped with the insulation base. The top bolt of disconnector is directly connected with the bottom of MOA, the below bolt is connected with ground lead.

The disconnector shall break away automatically at the fault current while the MOA failure under the abnormal conditions, and the failed MOA will be separated.

The figure shows the produc's operation. The dotted line in the figure shows the situation of the grounding part's disconnection while the disconnector operation.

Environmental conditions

- ◇ The ambient air temperatures is no higher than +40℃, no lower than −40℃;
- ◇ The altitude above sea level dose not exceed 3000m;
- ◇ AC system frequency is 50Hz or 60Hz;
- ◇ AC voltage brought to bear on arester for a long time does not exceedarrester's continuous operating voltage;
- ◇ Maximum wind speed dose not exceed 35m/s.

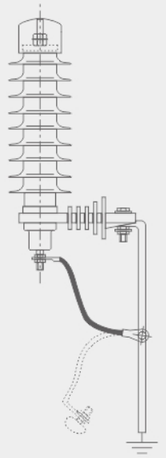

The disconnector's ampere-second characteristics

Current(A)	800	200	20	5	0.5	0.95
Operation times(s)	0.01~0.02	0.02~0.05	0.1~0.2	0.5~1.0	20~50	200~500

Note: The last "L" in the designation means the disconnector. Such as YH10W-24L means that the diconnector has be equipped in the MOA of YH10W-24. If the disconnector isn't equipped, the " L" no appear.

Tab technical parameters of typical

Type	Rated current (kA)	Rated voltage (kV)	Continuous operating voltage (kV≥)	1/4 Steep current residual voltage (kV≤)	8/20 Lightning current residual voltage (kV≤)	30/60 Switching current residual voltage (kV≤)	2000 μ s Rectangular wave current Impulse (A)	4/10 Current withstand discharge capacity (kA)	No.of photo
YH5W-3L	5	3	2.55	9.5	9	7.7			No.1
YH5W-6L	5	6	5.1	19.0	18	15.4			No.1
YH5W-9L	5	9	7.65	28.5	27	23.1			No.2
YH5W-12L	5	12	10.2	38.0	36	30.8			No.2
YH5W-15L	5	15	12.7	47.5	45	38.5			No.3
YH5W-18L	5	18	15.3	57.0	54	46.2			No.3
YH5W-21L	5	21	17.0	66.5	63	53.9			No.4
YH5W-24L	5	24	19.2	76.0	72	61.6	100	65	No.4
YH5W-27L	5	27	21.9	85.5	81	69.3			No.5
YH5W-30L	5	30	24.4	95.0	90	76.5			No.5
YH5W-33L	5	33	26.8	104.5	99	84.7			No.5
YH5W-36L	5	36	29.0	114.0	108	92.4			No.6
YH5W-42L	5	42	34.1	132.3	126	100.1			No.6
YH10W-3L	10	3	2.55	9.5	9	7.7			No.7
YH10W-6L	10	6	5.1	19.0	18	15.4			No.7
YH10W-9L	10	9	7.65	28.5	27	23.1			No.8
YH10W-12L	10	12	10.2	38.0	36	30.8			No.8
YH10W-15L	10	15	12.7	47.5	45	38.5			No.9
YH10W-18L	10	18	15.3	57.0	54	46.2			No.9
YH10W-21L	10	21	17.0	66.5	63	53.9	250	100	No.10
YH10W-24L	10	24	19.5	76.0	72	61.6			No.10
YH10W-27L	10	27	21.9	85.5	81	69.3			No.11
YH10W-30L	10	30	24.4	95.0	90	76.5			No.11
YH10W-33L	10	33	27.5	104.5	99	84.7			No.11
YH10W-36L	10	36	29.0	114.0	108	92.4			No.12
YH10W-42L	10	42	34.1	132.3	126	100.1			No.12

The polymeric housed metal oxide surge arrester


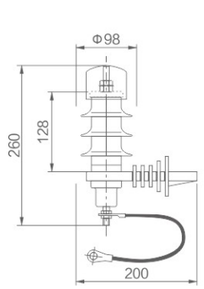

YH5W-3L, YH5W-6L (3 umbrellas, export type)


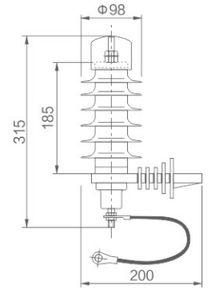

YH5W-9L, YH5W-12L (6 umbrellas, export type)


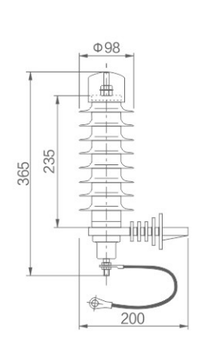

YH5W-15L, YH5W-18L (8 umbrellas, export type)


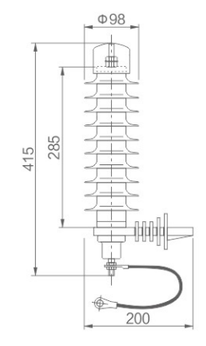

YH5W-21L, YH5W-24L (10 umbrellas, export type)


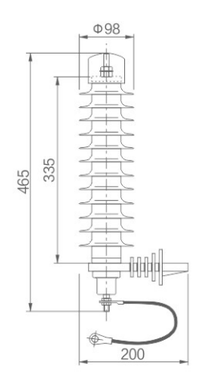

YH5W-27L/30L/33L (12 umbrellas, export type)


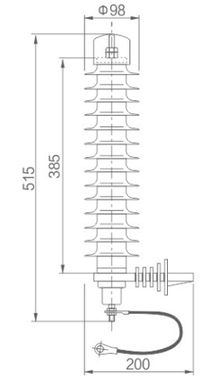

YH5W-36L, YH5W-42L (14 umbrellas, export type)


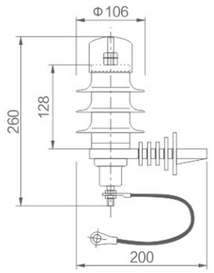

YH10W−3L, YH10W−6L (3 umbrellas, export type)


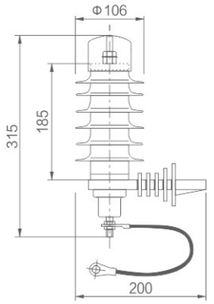

YH10W−9L, YH10W−12L (6 umbrellas, export type)


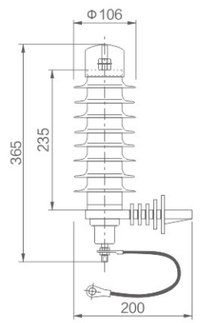

YH10W−15L, YH10W−18L (8 umbrellas, export type)


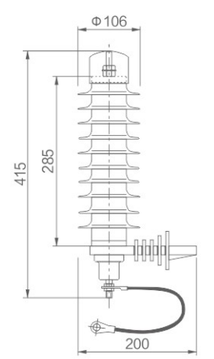

YH10W−21L, YH10W−24L (10 umbrellas, export type)


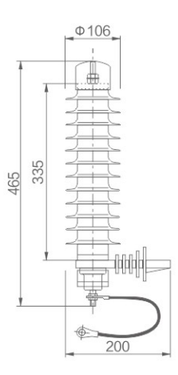

YH10W−27L/30L/33L (12 umbrellas, export type)


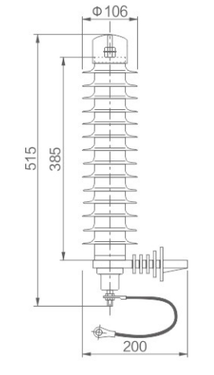

YH10W−36L, YH10W−42L (14 umbrellas, export type)

D

Porcelain wrap series


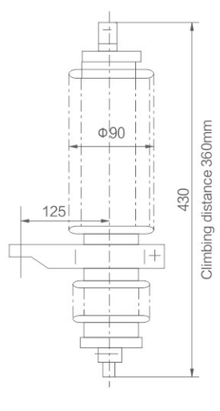

Y10W−11L
(Porcelain sleeve type, export type)


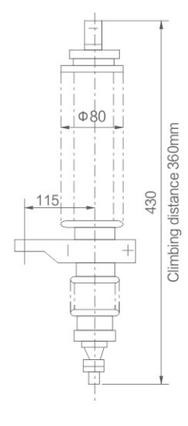

Y5W−11
(Porcelain sleeve type, export type, with release device)


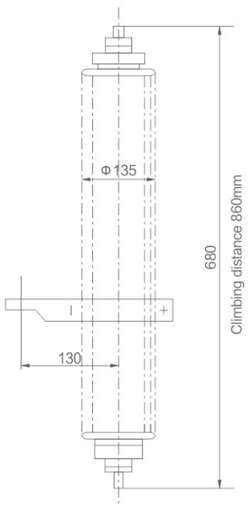

Y5W−33, Y10W−33
(Porcelain sleeve type, export type)


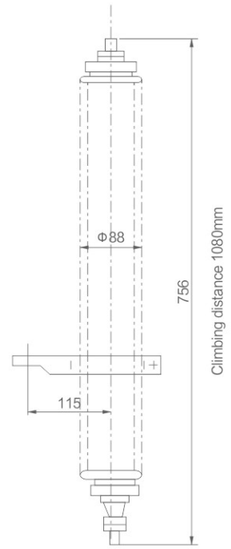

Y5W−33, Y10W−33
(Porcelain sleeve type, export type, with release device)

D

Lightning arrester series

Professional manufacturer

>>> you can count on >>>

DGG®
DENGGAO ELECTRIC

YH series

The metal oxide
Surge arrester



Overview

As a special supporting product of lightning arresters, the disconnector can be used in series with lightning arresters. In the event of lightning arrester failure, it can quickly act and remove the faulty lightning arrester from the power grid. At the same time, it provides clear disconnection signs, making it easy for maintenance personnel to identify the fault point and replace the arrester. On the other hand, when the lightning arrester is working normally, the disconnector does not act and exhibits low impedance, which does not affect the protective characteristics of the lightning arrester. The installation of lightning arresters with disconnectors is the only way to truly achieve safe, maintenance free use, convenience, and reliability. The distribution type, power station type, and line type lightning arresters operating in developed countries and regions such as Europe, America, and Japan are generally equipped with disconnectors.

Our company's disconnector adopts a new type of thermal explosion design, which has the advantages of fast response and error free operation, and can be used in conjunction with various models of lightning arresters above 3kV. Its usage conditions are the same as lightning arresters.

Typical safety of disconnector–second characteristic parameter table

Current(A)	800	200	20	5	0.5	0.05
Operation times(s)	0.01~0.02	0.02~0.05	0.1~0.2	0.5~1.0	20~50	200~500

Appearance and installation dimensions

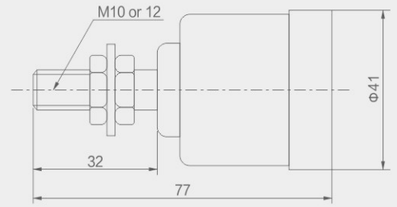

Installation diagram of disconnector

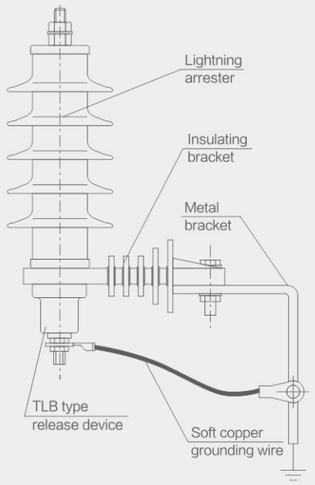

Bracket installation method

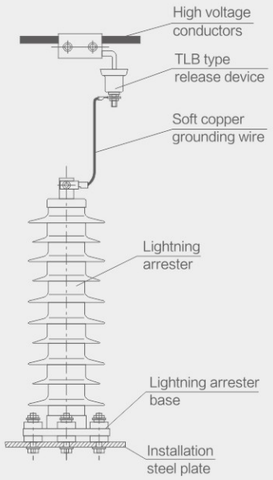

Power station installation method

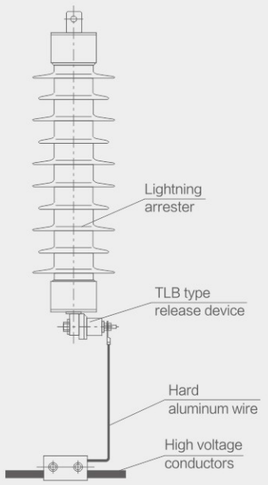

Line type installation method

◇ The conventional installation method of the disconnector is shown in the above figure, and other installation methods can also be used according to the actual situation under special conditions.

◇ For detailed instructions and usage of the disconnector, please refer to our company's dedicated release device user manual. If the egg dodger is equipped with a release device, add the letter "L" after its standard model to indicate it. For example, YH5WS–17/50L indicates the installation of a disconnector on the YH5WS–17/50 lightning arrester.

D

Lightning arrester series

Professional manufacturer

>>> you can count on >>>

DGG®
DENGGAO ELECTRIC

JS/JCQ/JSM series

Counters / Monitors



JS-8 counter



JCQ-10 monitor



JSM-2/800 monitor

Overview

Counter, as a special supporting product of lightning arrester, is used in series with lightning arrester to record its working condition. Especially suitable for 35KV and above power stations and line lightning arresters, it can also be used in conjunction with three-phase combination overvoltage protection products.

Counters can be divided into outdoor dial type and cabinet type in structure; Functionally, it can be divided into simple counting type and additional current monitoring type; On the components, it can be divided into valve sampling type and transformer sampling type. Our company produces the above types of counters.

DGG®
DENGGAO ELECTRIC

Main technical parameters

Typical model	Product description	System voltage level (kV)	Nominal discharge current (kA)	Operating current range (A)	Additional residual voltage under nominal current (kV)	2000 μ s square wave current capacity (A)	4/10 high current tolerance (kA)
JS-8	Ordinary counter	3~66	5	50~5000	1	400	65
JCQ-10	Current type online monitor	3~220	10	50~5000	1	600	100
JSM-2							

Appearance and installation dimensions

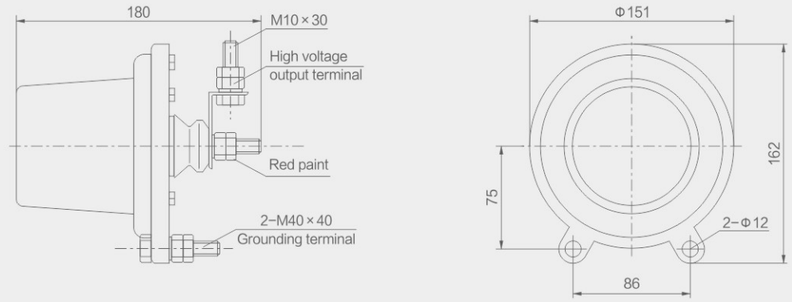

Standard external dimension diagram of JS and JCQ type counters

◇ For detailed instructions and usage of the counter, please refer to our company's dedicated counter user manual. If the lightning arrester is equipped with a counter, add the letter "J" after its standard model (products with additional current monitoring function are represented by the letter "JCQ"). For example, YH5WS-17/50J indicates that a counter has been installed on the YH5WS-17150 snow dodger.

D

Lightning arrester series

Professional manufacturer
>>> you can count on >>>

DGG®
DENGGAO ELECTRIC

YH5WS series

Special lightning arrester

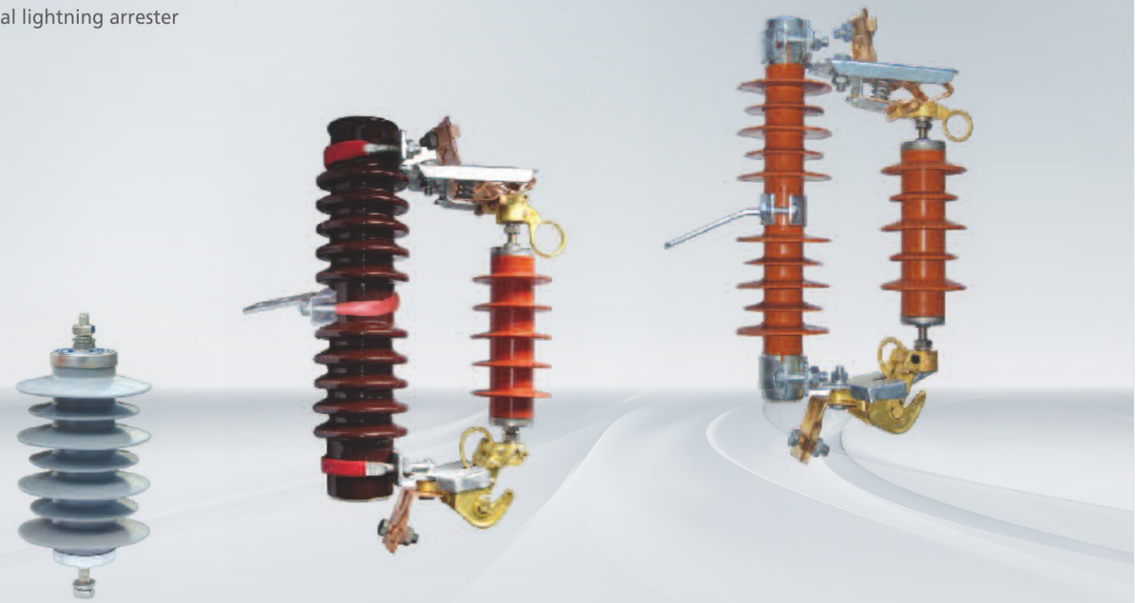

Drop type lightning arrester

A drop type lightning arrester is a special lightning arrester that utilizes the working principle of a drop type fuse to achieve free replacement under continuous power supply. This product can greatly reduce the workload of maintaining lightning arresters and is widely used in hospitals, stations, airports, and other places that require high power supply stability.



YH5WS-17/50DL drop type lightning arrester



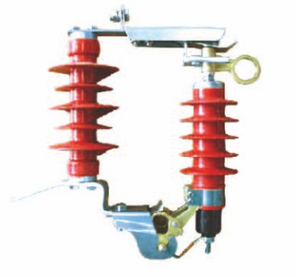

YH5WS-17/50DL-TB drop type lightning arrester

DGG®
DENGGAO ELECTRIC

Enhanced composite coat shelter (GY)

Reinforced lightning arrester is a reinforcement of ordinary lightning arrester, widely used in Class IV or above heavily polluted areas where ordinary lightning arrester cannot be used normally; High cold areas with an altitude of over 3500 meters; Tropical rainy or humid hot areas such as sea platforms. The climbing distance, distance, and various insulation strengths are far superior to ordinary lightning arresters.

The reinforced composite jacket lightning arrester is represented by the letter GY.



10kV plateau type lightning arrester (GY)

Fully insulated lightning arrester with cable (Q)

The fully insulated lightning arrester comes with insulated cables on the high-voltage side, which can significantly reduce the height and phase to phase distance requirements of the lightning arrester, and is widely used in small space complete switchgear. The fully insulated lightning arrester is represented by the letter Q.



YH5WA-17/50FZ
(Used for cable branch boxes)

Fixed gap line lightning arrester (CX)

Fixed gap line lightning arrester is a simplified type of regular air gap line lightning arrester, which uses suspended insulators to fix the gap and can replace air gap line lightning arrester. Its advantages are: a fixed insulator frame, which is conducive to simplifying the installation and debugging of the construction unit; Its disadvantage is that due to the interference of insulators, the gap working performance will be affected to a certain extent.



110kV fixed gap line lightning arrester