DGG

BROCHURE / CATALOG >>>>>

https://www.dggpower.com

DGG 登高

DGG 登高

GW1 – 12

ISOLATION SWITCH / DISCONNECTOR

OUTDOOR / THREE-PHASE / HIGH-VOLTAGE



登高电气有限公司
DENGGAO ELECTRIC CO.,LTD.

GW9 - 12 OUTDOOR ISOLATION SWITCH / DISCONNECTOR

1. SUMMARY

(GW1-12 series outdoor high voltage AC disconnector (hereinafter referred to as "disconnector") It is applicable to the device on the outdoor high-voltage distribution equipment line for the replacement of 10kV line under voltage and no load, and for the electrical isolation of the overhauled high-voltage bus, circuit breaker and other electrical equipment from the live high-voltage line. It can also be used to close a small capacitive current and inductive current.

The Isolation switch (disconnector) is a double column vertical opening type, equipped with a manual or electric mechanism, which can realize three-phase linkage.

The Isolation switch meets the technical standards of high voltage AC disconnectors and earthing switches (GB/T 1985-2014) and high voltage AC disconnectors and earthing switches (DL/T 486-2010)..

2. MODEL AND MEANING

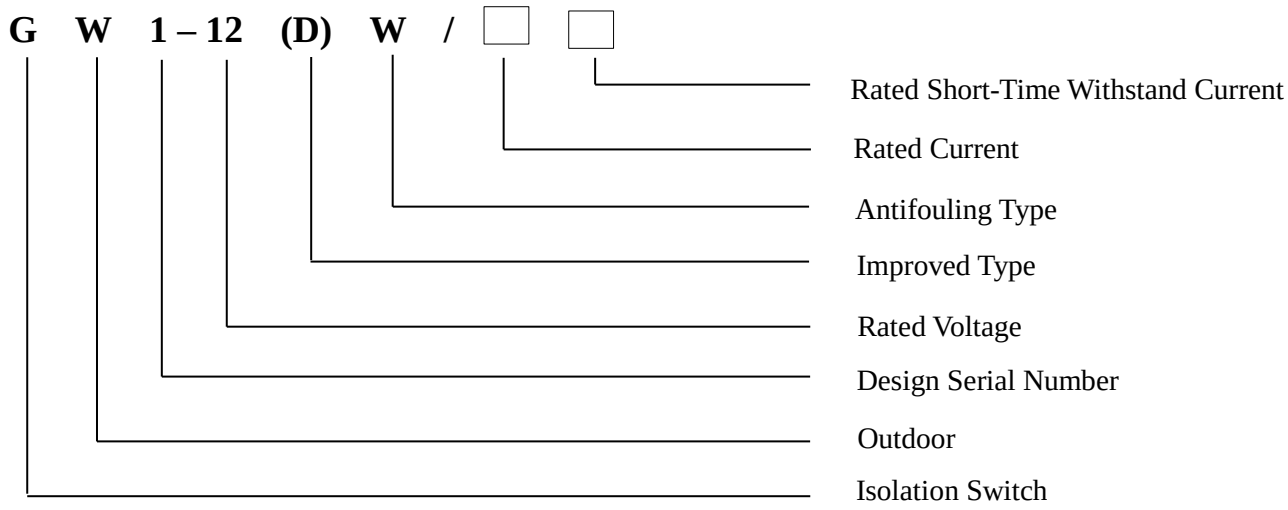

3. USAGE: ENVIRONMENTAL CONDITIONS

1. Altitude: Not more than 1000m / Icing thickness: not more than 20mm
2. Ambient air temperature: maximum +40 ℃, minimum - 40 ℃, daily temperature difference 25K
3. Humidity: daily average relative humidity ≤ 95%, monthly average relative humidity ≤ 90%
4. Solar Radiation Intensity (outdoor)/ Pollution level: 0.1W/cm^2 / e-level
5. Winding speed / pressure (outdoor): 0.5m/s / 700Pa
6. Earthquake resistance: horizontal acceleration 0.3 m/s^2, vertical acceleration 0.15m/s^2
7. Safety factor: sinusoidal resonance three-cycle wave, safety factor above 1.67

GW9 - 12 OUTDOOR ISOLATION SWITCH / DISCONNECTOR

4. MAIN ADVANTAGES

1. The utility model has the advantages of simple structure, beautiful appearance, and convenient installation.
2. The insulator is designed with high-strength porcelain material and a large climbing distance, which has strong pollution resistance and environmental adaptability and can meet the operation requirements in high-altitude areas.
3. The interlocking device can effectively prevent the misoperation of the grounding knife.
4. The operation is simple and reliable. Manual or electric operation mechanisms can be selected according to the user's requirements.

5. TECHNICAL PARAMETER TABLE

No.	Item		Unit	Parameters			
1	Rated Frequency		Hz	50 / 60			
2	Rated Voltage		kV	12			
3	Rated Current		A	630		1250	
4	Rated Short-Time Withstand Current and Duration	Isolation Switch	kA / s	20 / 4	25 / 4	25 / 4	31.5 / 4
		Earthing Switch		20 / 2	25 / 2	25 / 2	31.5 / 2
5	Rated Peak Withstand Current		kA	50 (63)			
6	Rated Short-Time Power Frequency Withstand Voltage	Phase, to Earth (dry)	kV / min	42 / 1			
		Fracture (dry)		48 / 1			
		Phase, to Earth (wet)		30 / 1			
7	Rated Lightning Impulse Withstand Voltage	Phase, to Earth	kV	75			
		Fracture		85			
8	Circuit Resistance		μΩ	≤ 100		≤ 80	
9	Mechanical Life		Times	3000			
10	Creepage distance / Pollution Grade		mm	≥ 372 / E - level			
If the altitude is over 1000m, the rated insulation level should be modified as appropriate							

GW9 - 12 OUTDOOR ISOLATION SWITCH / DISCONNECTOR

6. GW1 – 12W/630-20(25) (OUTLINE AND INSTALLATION DIMENSION)

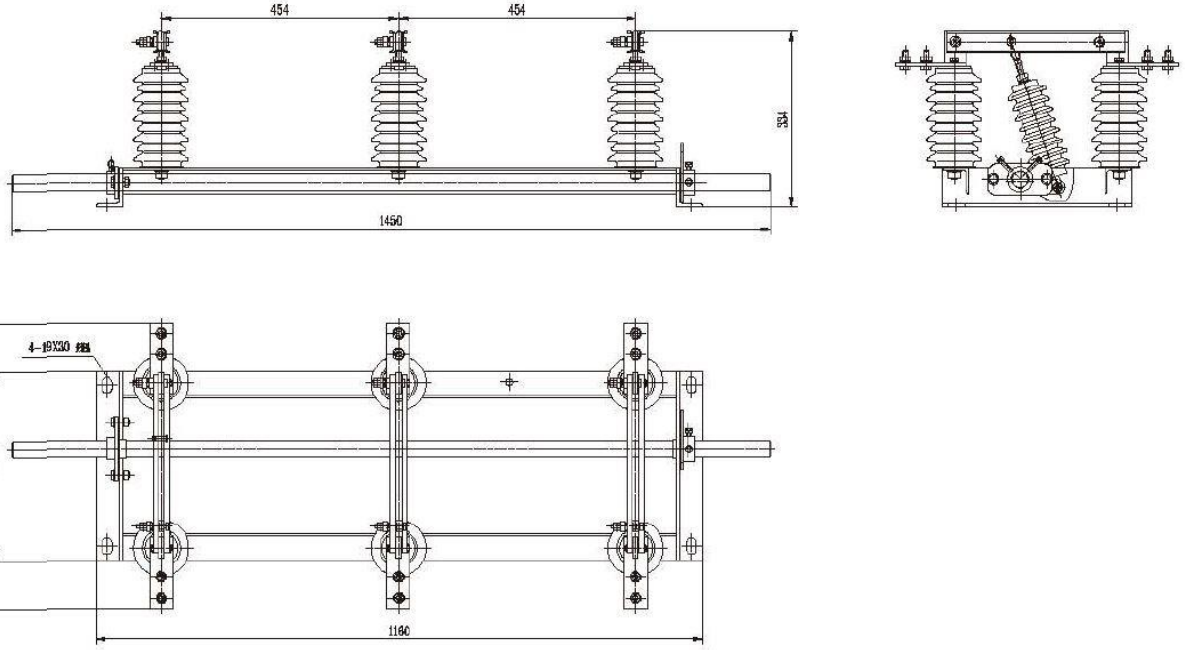

GW1 – 12W/1600-31.5 (OUTLINE AND INSTALLATION DIMENSION)

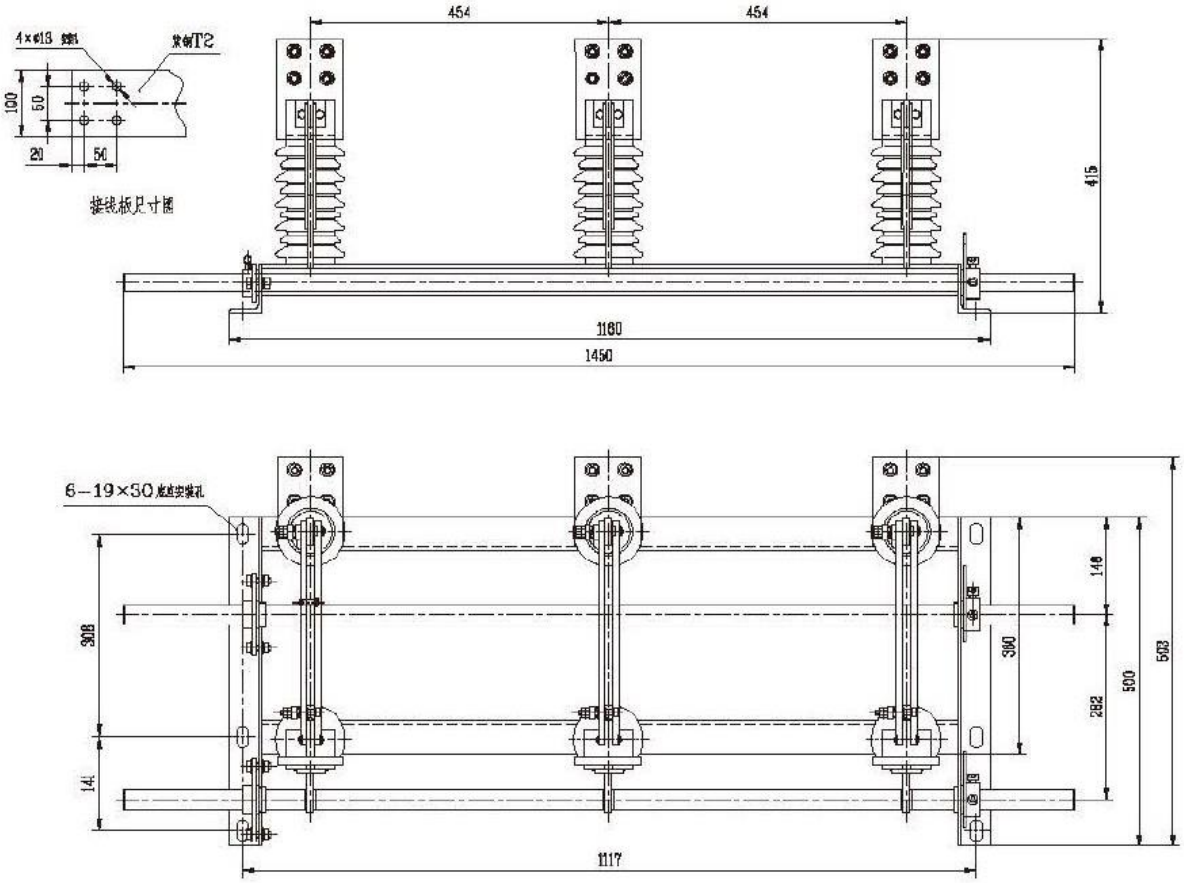

© DENGGAO ELECTRIC CO. LTD; ALL RIGHTS RESERVED

登高电气有限公司
DENGGAO ELECTRIC CO.,LTD.
HEADQUATERS: NO. 208 WEI WU ROAD, ECONOMIC DEVELOPMENT ZONE, YUEQING-WENZHOU, ZHEJIANG-CHINA
PHONE NUMBER: 0577 – 57576678
EMAIL ADDRESS: sale@dggpower.com

DGG 登高