DGG

BROCHURE / CATALOG >>>>>

https://www.dggpower.com

DGG 登高

DGG 登高

GW4A – 12

ISOLATION SWITCH / DISCONNECTOR

OUTDOOR / THREE-PHASE / HIGH-VOLTAGE



登高电气有限公司
DENGGAO ELECTRIC CO.,LTD.

GW4A - 12 OUTDOOR ISOLATION SWITCH / DISCONNECTOR

1. SUMMARY

GW4A-12 series finished hairpin improved outdoor high-voltage AC isolation switch(hereinafter referred to as "Isolation switch") is an outdoor high-voltage switchgear with a rated frequency of 50Hz, which is used for switching 10kV High-voltage Line under voltage and no load, and for the electrical isolation of overhauled high-voltage bus, circuit breaker and other electrical equipment from live high-voltage lines, It can also be used to close very small capacitive current and inductive current.

The Isolation switch meets the technical standards of high voltage AC disconnectors and earthing switches (GB/T 1985-2014) and high voltage AC disconnectors and earthing switches (DL/T 486-2010)..

2. MODEL AND MEANING

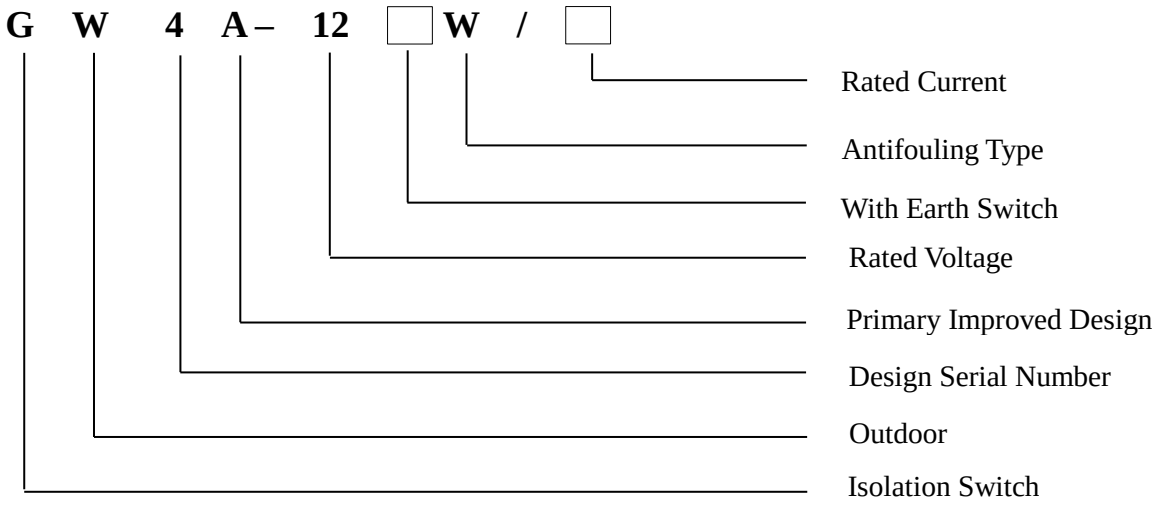

3. USAGE: ENVIRONMENTAL CONDITIONS

1. Altitude: Not more than 1000m / Icing thickness: not more than 20mm
2. Ambient air temperature: maximum +40 ℃, minimum - 40 ℃, daily temperature difference 25K
3. Humidity: daily average relative humidity ≤ 95%, monthly average relative humidity ≤ 90%
4. Solar Radiation Intensity (outdoor)/ Pollution level: 0.1W/cm^2 / e-level
5. Winding speed / pressure (outdoor): 34m/s / 700Pa
6. Earthquake resistance: horizontal acceleration 0.3 m/s^2, vertical acceleration 0.15m/s^2
7. Safety factor: sinusoidal resonance three-cycle wave, safety factor above 1.67

GW4A - 12 OUTDOOR ISOLATION SWITCH / DISCONNECTOR

4. MAIN ADVANTAGES

1. The improved design is adopted, and the installation is simple and convenient without welding.
2. It adopts double column mid opening and contact tap in structure, with automatic contact cleaning capability and strong operation reliability.
3. The contact finger is made of materials with high strength, high conductivity and high elasticity, which can snap the contact with its own elasticity, avoiding the vicious circle caused by the reduction of contact clamping force caused by spring corrosion and thermal annealing, the increase of contact resistance and the intensification of contact heating.
4. The insulator is made of high-strength porcelain material and designed with large creepage distance. It has strong pollution resistance and environmental adaptability and can meet the operation requirements in high altitude areas.
5. The rotating part shall be designed according to maintenance free requirements.

5. TECHNICAL PARAMETER TABLE

No.	Item		Unit	Parameters			
1	Rated Frequency		Hz	50 / 60			
2	Rated Voltage		kV	12			
3	Rated Current		A	630	1250	2000	2500
4	Rated Short-Time Withstand Current		kA	20 / 4	25 / 4	25 / 4	31.5 / 4
5	Rated Short-Time Withstand Current (Peak Value)		kA	50 / 63	63 / 80	80	80 / 100
6	Rated Short-Time Power Frequency Withstand Voltage	Phase, to Earth	kV / min	42 / 1			
		Fracture		48 / 1			
7	Rated Lightning Impulse Withstand Voltage	Phase, to Earth	kV	75			
		Fracture		85			
8	Rated Short-Time Withstand Current and Continuous Time		s	4 (Isolation Switch), 2 (To Earth Switch)			
9	Circuit Resistance		μΩ	≤ 100		≤ 80	
10	Mechanical Life		Times	2000 (Isolation Switch / To Earth Switch)			
11	Creepage distance / Pollution Grade		mm	≥ 372 / E - level			
If the altitude is over 1000m, the rated insulation level should be modified as appropriate							

GW4A - 12 OUTDOOR ISOLATION SWITCH / DISCONNECTOR

6. OUTLINE AND INSTALLATION DIMENSION

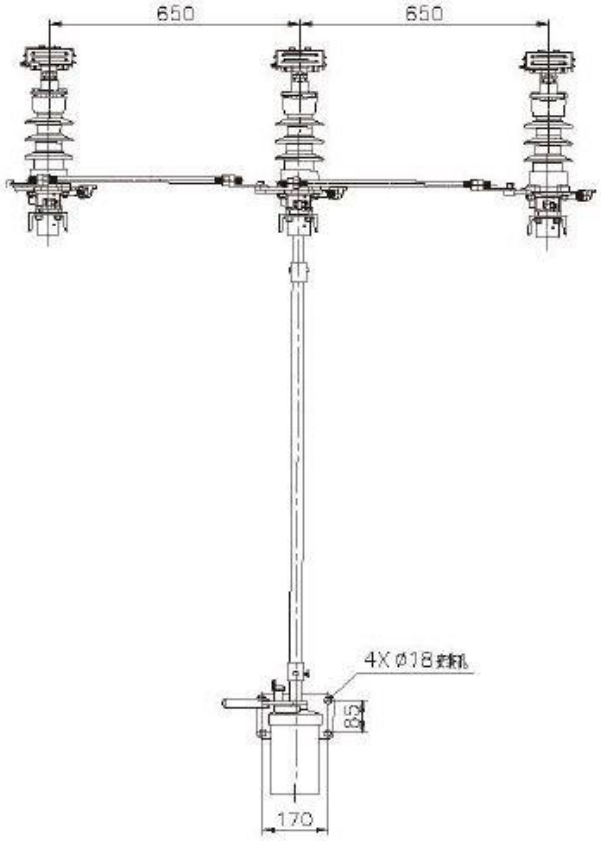

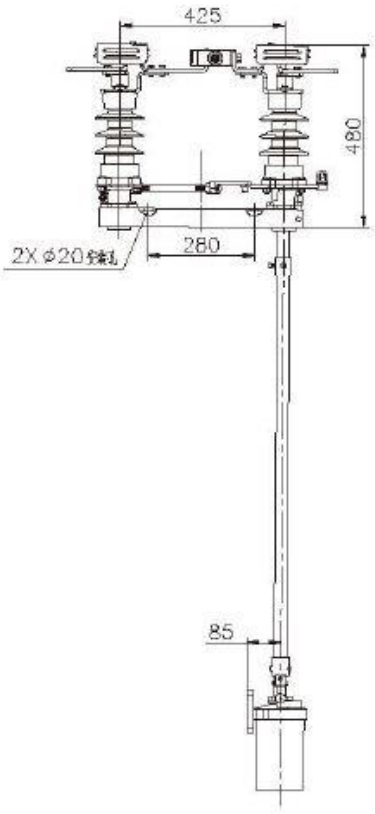

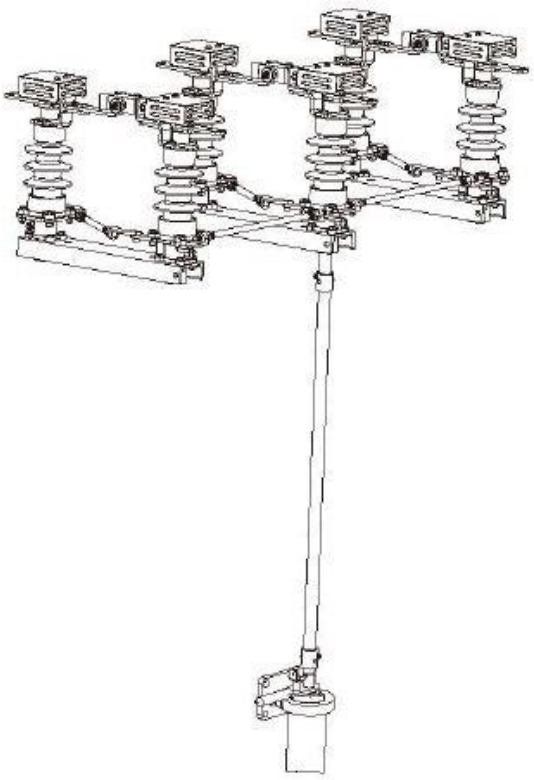

© DENGGAO ELECTRIC CO. LTD; ALL RIGHTS RESERVED

登高电气有限公司
DENGGAO ELECTRIC CO.,LTD.
HEADQUATERS: NO. 208 WEI WU ROAD, ECONOMIC DEVELOPMENT ZONE, YUEQING-WENZHOU, ZHEJIANG-CHINA
PHONE NUMBER: 0577 – 57576678
EMAIL ADDRESS: sale@dggpower.com

DGG 登高