DGG

BROCHURE / CATALOG >>> >

https:www.dggpower.com

DGG 登高

DGG 登高

HXGN

GAS INSULATED

RING NETWORK SWITCHGEAR



登高电气有限公司
DENGGAO ELECTRIC CO.,LTD.

HXGN BOX TYPE SF6 RING NETWORK SWITCHGEAR

1. GENERAL

HXGN – 12, 24 box type fixed AC metal-enclosed ring network switchgear (hereinafter referred to as "ring network cabinet/switchgear") is suitable for power distribution systems in areas such as industrial and mining enterprises, residential areas, high-rise buildings, schools, and parks. It is used as an indoor AC three-phase 12kV, 24kV, and 50Hz ring network power supply unit and terminal power distribution equipment. It can disconnect or close the rated load current and transformer no-load current and can disconnect or close the overhead line, cable line, or capacitive current at a certain distance. The load switch fuse combination cabinet can disconnect the rated short-circuit current at one time. In the power system, as the protection of distribution equipment and the distribution and control of electric energy, it has a perfect "five prevention" locking function.

The switchgear complies with the requirements of national standard GB3906 (3-35kv AC metal-enclosed switchgear), GB /T11022 (common technical requirements for standards of high voltage switchgear and control equipment), National Standard IEC 60298 (AC metal-enclosed switchgear and control equipment with rated voltage above 1kV and below 52kV), and IEC 60694 (common terms for high voltage switchgear and control equipment).

HXGN œ - 12 ring network structure is composed of 8MF steel locally welded and bolted. It is mainly equipped with an fln36 sulfur HEXAOXIDE load switch and FZN12 / FZN21 / FZN25 two-position vacuum load switch. The load switch and fuse with the impactor are used as combined appliances. The ring main cabinet can be flexibly equipped with CT, PT, and ZnO arresters. A removable movable cover plate is installed at the bottom of the cabinet to facilitate cable incoming. For overhead incoming lines, another bus channel can be installed according to the user's requirements.

HXGN BOX TYPE SF6 RING NETWORK SWITCHGEAR

2. MODEL AND MEANING

H X G N □ - □ / □ - □

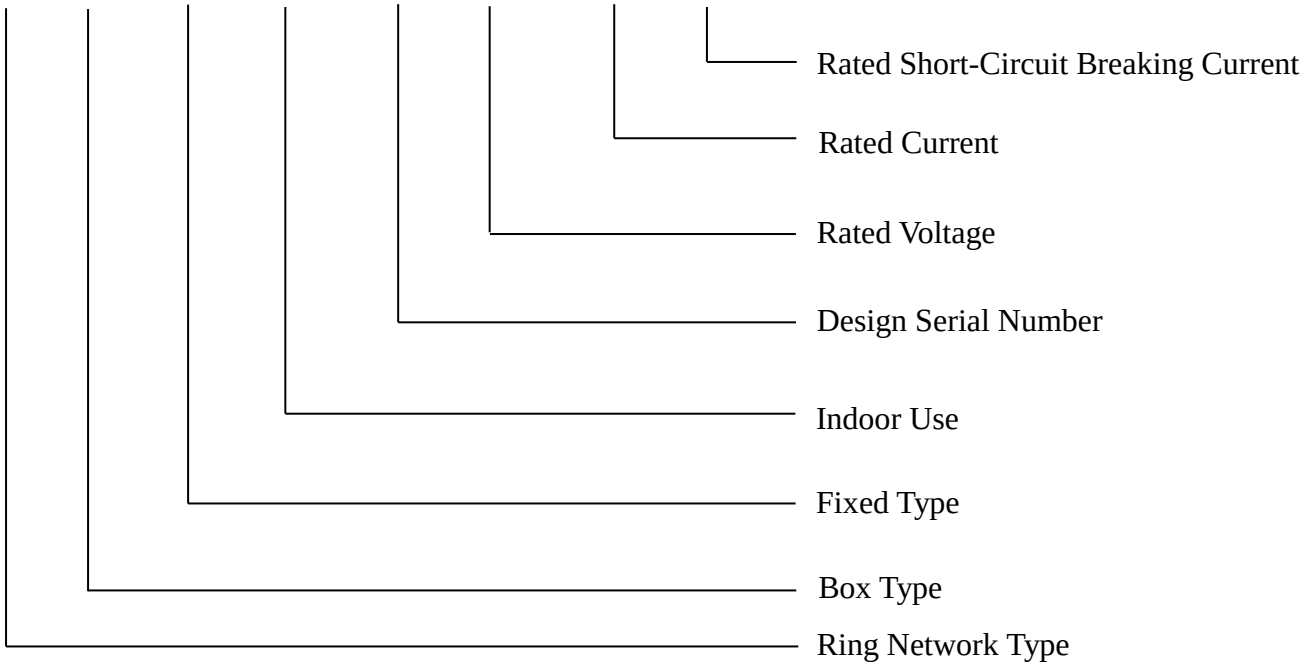

3. NORMAL SERVICE CONDITIONS

1. 1. The altitude shall not exceed 1000 meters, and the altitude under special use conditions shall not exceed 2000 meters
2. Ambient Temp: Upper limit +40˚C, The average value measured within 24h shall not exceed 35˚C, and the lowest ambient air temp -15˚C
3. Relative humidity:
   a. The Ave. value of relative humidity measured within 24h shall not exceed 95%
   b. The average value of water vapor pressure measured within 24h shall not exceed 2.2kpa
   c. The average monthly relative temperature shall not exceed 90%
   d. The average monthly water vapor pressure shall not exceed 1.8kpa
4. The surrounding air is not appreciably polluted by dust, smoke, corrosive and/or flammable gases, vapors, or salt mist.
5. When the equipment is installed, the inclination from the vertical plane should not exceed 5˚C.
6. The equipment should be installed in a place free from severe pulling and impact.
7. Note: Users can negotiate with our company for special requirements.

4. TECHNICAL PARAMETERS FOR 12kV SYSTEM

No.	Item		Unit	Parameters
1	Rated voltage		kV	7.2 / 12
2	Rated Current of Main Bus		A	630
3	Rated Current	Incoming Cabinet	A	630
		Outgoing Cabinet (Combined Electrical Cabinet)	A	125 (Biggest)
4	Rated Short-Time Withstand Current		kA	20
5	Rated Peak Withstand Current		kA	31.5
6	Rated Short-Time Making Current (Peak Value)		kA	50
7	Rated Active Load Breaking Current		A	630
8	Rated Closed-Loop Breaking Current		A	630
9	Rated Cable Charging Current		A	10
10	Rated Short-Time Withstand Current of Earthing Switch		kA	20
11	Rated Peak Withstand Current of Earthing Switch		kA	50
12	Rated Short-Time Making Current Making Peak Value of Earthing Switch.		kA	50
13	Rated Breaking Current of Cable Point		A	3150
14	1min Power Frequency Withstand Voltage	Phase-Phase Vacuum Fracture	kV	42
		Isolation Fracture		48
15	Lightning Impulse Withstand Voltage	Phase-Phase Vacuum Fracture	kV	75
		Isolation Fracture		85
16	Mechanical Life Span	Vacuum Load Switch	Times	10000
		Isolation knife Earth Knife		2000
17	Load Switch	Average Closing Speed	m/s	0.6±0.2
		Average Opening Speed		1.1±0.2
		3-Phase Asynchrony		≤2
18	Fuse for the Combined Appliance	Maximum Rated Current	A	125
		Rated Short-Circuit Breaking Current	kA	31.5
19	Protection Level			IP3X

HXGN BOX TYPE SF6 RING NETWORK SWITCHGEAR

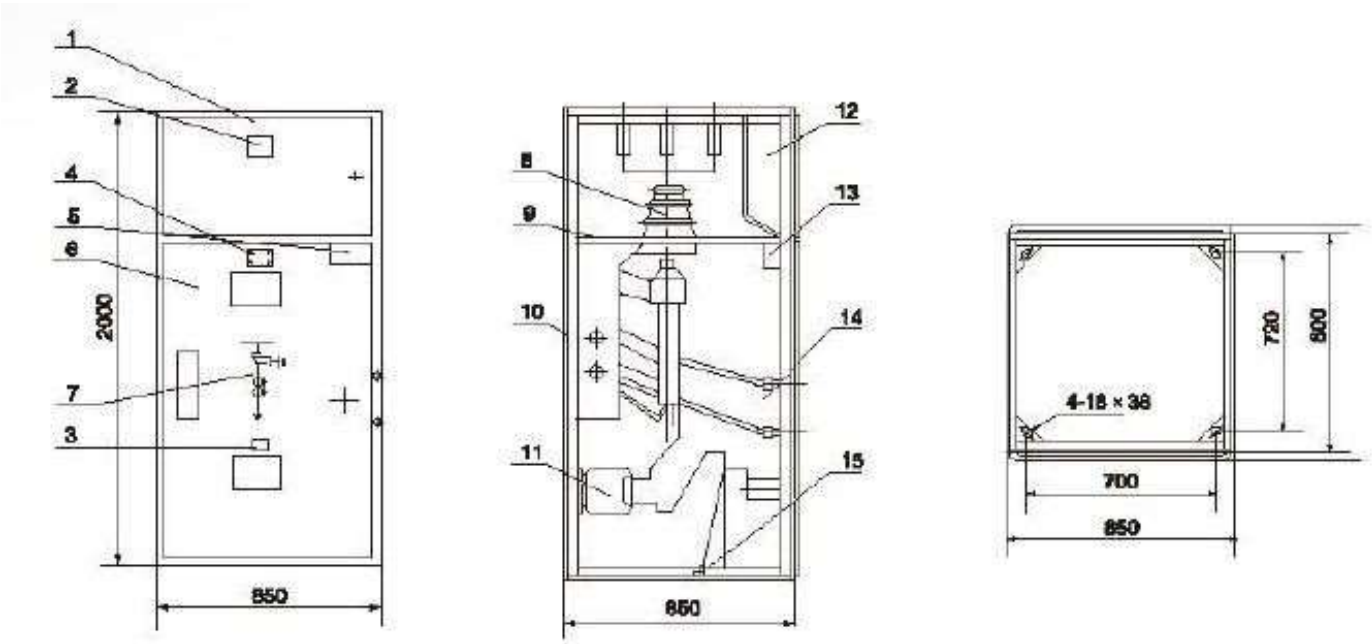

1. INSTRUMENT DOOR
2. INSTRUMENT
3. DXN MONITOR
4. NAMEPLATE
5. OPERATION MECHANISM
6. FRONT LOWER DOOR
7. SIMULATION CARD
8. LOAD SWITCH
9. MIDDLE PARTITION
10 FRAME
11. CURRENT TRANSFORMER
12. RELAY
13. LIGHTING
14. OPERATION MECHANISM
15. CABLE SUPPORT

© DENGGAO ELECTRIC CO. LTD; ALL RIGHTS RESERVED

登高电气有限公司
DENGGAO ELECTRIC CO.,LTD.
HEADQUATERS: NO. 208 WEI WU ROAD, ECONOMIC DEVELOPMENT ZONE,
YUEQING-WENZHOU, ZHEJIANG-CHINA
PHONE NUMBER: 0086-577-57576678
EMAIL ADDRESS: sale@dggpower.com

DGG 登高