DGG

BROCHURE / CATALOG >>>>>

https://www.dggpower.com

DGG 登高

DGG 登高

KYN28 – 12

ARMORED MOVABLE AC METAL-CABLE SWITCHGEAR

INDOOR / THREE-PHASE / HIGH VOLTAGE



登高电气有限公司
DENGGAO ELECTRIC CO.,LTD.

KYN ARMORED REMOVABLE AC METAL-ENCLOSED SWITCHGEAR

1. SUMMARY

KYN28-12 (Z) (GZS1) Armored removable AC metal-enclosed switchgear (hereinafter referred to as "switchgear") is suitable for a three-phase AC 50Hz power system, which is used to receive and distribute energy and control, protect and monitor the circuit.

This product meets the following standards: GB3906 3 - 35kV AC metal-enclosed switchgear, GB / T 11022 common technical requirements for standards of high voltage switchgear and control equipment, IEC 60298 AC metal-enclosed switchgear, and control equipment with rated voltage above 1kV and below 50kV, DL / t404 technical requirements for ordering indoor AC high voltage switchgear.

2. MODEL AND MEANING

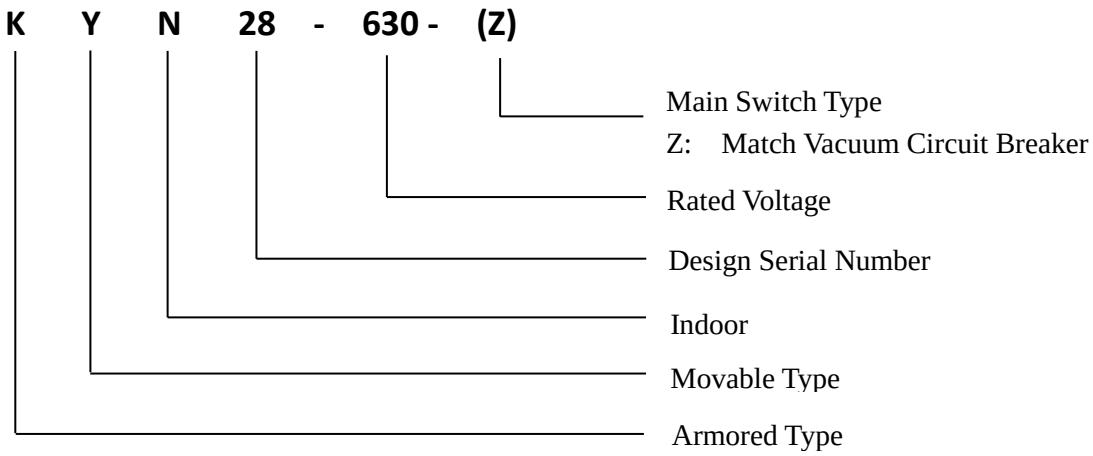

3. NORMAL USAGE CONDITIONS

1. Altitude: Less than 1000 meters
2. Ambient Temperature: Upper limit +400C, Lower limit -150C;
3. Humidity conditions:

   Average daily relative humidity: ≤ 95%
   The average daily water vapor pressure does not exceed 2.2kPa
   Average daily relative humidity: ≤ 90%
   The average daily water vapor pressure does not exceed 1.8kPa
4. No frequent violent vibrating places.
5. The surrounding air shall not be obviously polluted by corrosive or combustible gas, water vapor, etc.
6. Ground oxygen intensity: no more than 8 degrees.
7. When used under normal environmental conditions exceeding the GB3906 specification, it shall be negotiated between the user and the manufacturer.

4. TECHNICAL PARAMETER TABLE

NO	ITEM			UNIT	DATA
1	Rated Voltage			kV	3.6, 7.2, 12
2	Rated Frequency			Hz	50
3	Rated Current of Circuit			A	630, 1250, 1600, 2000, 2500
4	Rated Current of Switchgear				3150, 4000
5	Rated Short-time Withstand Current (4s)			kA	20, 25, 31.5, 40, 50
6	Rated Withstand Current (peak)				50, 63, 80, 100, 125
7	Rated Short-Circuit Breaking Current				20, 25, 31.5, 40, 50
8	Rated Short-Time Making Current (peak)				50, 63, 80, 100, 125
9	Rated Insulation Level	1 min Power Frequency Withstand Voltage	Interphase, Between Pole to Earth	kV	24, 32, 42
			Between Fracture		24, 32, 48
		Lightning Impulse Withstand Voltage	Interphase, Between Pole to Earth		40, 60, 75
			Between Fracture		46, 70, 85
10	Protection Level			The enclosure is IP4X, and the compartment is IP2X when the door of the circuit breaker room is opened	

KYN ARMORED REMOVABLE AC METAL-ENCLOSED SWITCHGEAR

5. OUTLINE AND INSTALLATION DIMENSIONS

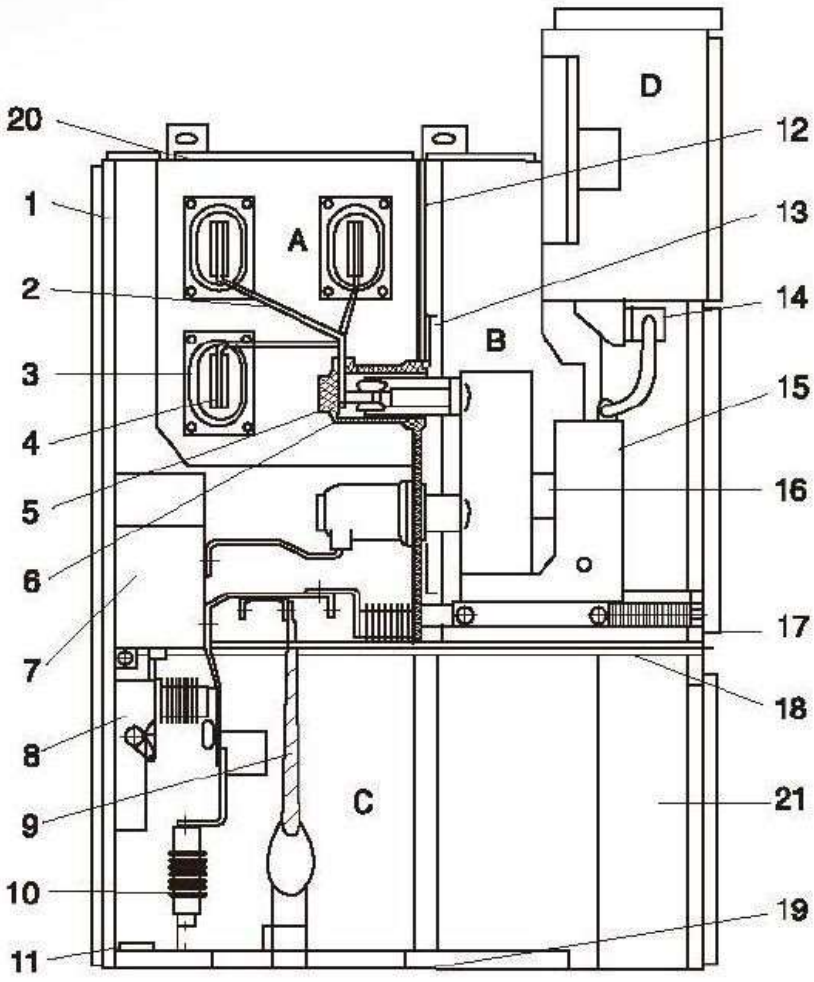

A BUS-BAR CHAMBER
B CIRCUIT BREAKER CHAMBER
C CABLE CHAMBER
D RELAY INSTRUMENT ROOM
1. ENCLOSURE / CASING
2. BRANCH BUS
3. BUSBAR BUSHING
4. MAIN BUSBAR
5. STATIC CONTACT DEVICE
6. CONTACT BOX
7. CURRENT TRANSFORMER
8. EARTHING SWITCH
9. CABLE
10. LIGHTNING ARRESTER
11. EARTHING BUSBAR
12. DETACHABLE PARTITION
13. DIVISION PLATE (VALVE)
14. SECONDARY SOCKET
15. CIRCUIT BREAKER HANDCART
16. HEATING DEVICE
17. WITHDRAWABLE HORIZONTAL PARTITION
18. EARTHING SWITCH OPERATING MECHANISM
19. BOTTOM PLATE
20. PRESSURE RELIEF DEVICE
21. CONTROL WIRING DUCT

© DENGGAO ELECTRIC CO. LTD; ALL RIGHTS RESERVED

登高电气有限公司
DENGGAO ELECTRIC CO.,LTD.
HEADQUATERS: NO. 208 WEI WU ROAD, ECONOMIC DEVELOPMENT ZONE, YUEQING-WENZHOU, ZHEJIANG-CHINA
PHONE NUMBER: 0577 – 57576678
EMAIL ADDRESS: sale@dggpower.com

DGG 登高