DGG

BROCHURE / CATALOG >>>>>

https://www.dggpower.com

DGG 登高

DGG 登高

ZW32 – 12Y

PREPAID METERING VACUUM CIRCUIT BREAKER

OUTDOOR / THREE-PHASE / HIGH-VOLTAGE

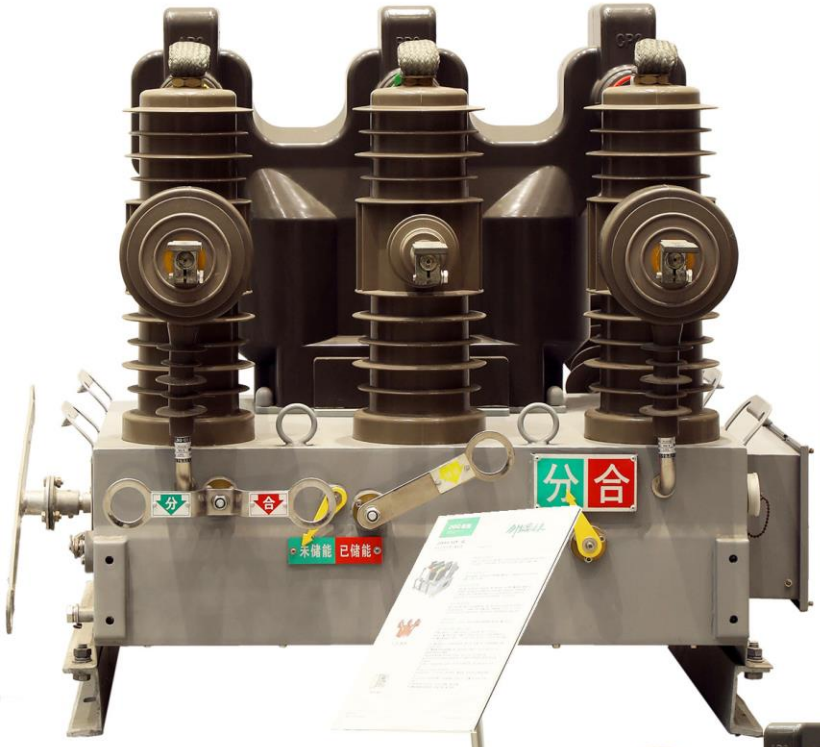



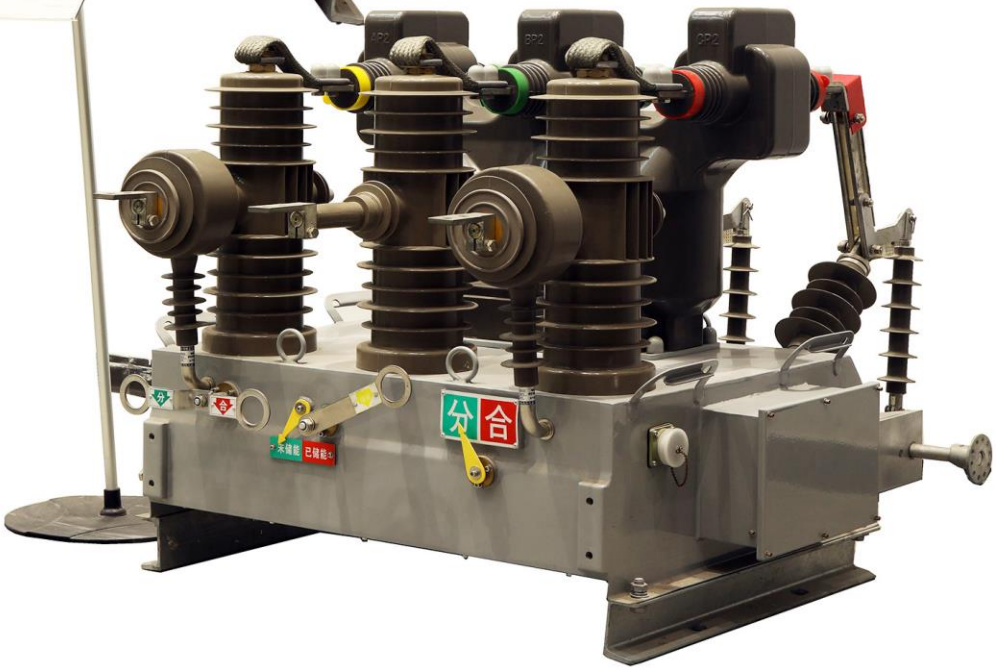

登高电气有限公司
DENGGAO ELECTRIC CO.,LTD.

ZW32-12Y PREPAID METERING VACUUM CIRCUIT BREAKER

1. SUMMARY

Zw32-12Y series outdoor high-voltage AC prepaid metering vacuum circuit breaker (hereinafter referred to as "prepaid circuit breaker") is an outdoor high-voltage distribution switchgear with a rated voltage of 12kV and three-phase AC 50Hz. According to the user's requirements, the high-voltage metering box of the prepaid circuit breaker can be a three-phase three-wire system (V / V wiring) or a three-phase West wire system (Y / y.no wiring). The metering current transformer can be a single transformer with a ratio range of (2.5 ~ 1200) / 5.

The prepayment circuit breaker body and the high-voltage metering box are designed in an integrated manner. The control box is composed of the prepayment meter and the high-voltage circuit breaker control circuit. It can be installed with a prepayment meter for prepayment measurement according to the user's requirements, and it can also be installed with a YDG power consumption management terminal. The circuit breaker can be directly controlled by the background, and real-time shop parameters and switch status can be queried.

Prepaid circuit breakers comply with GB / T 1984-2014 high voltage AC circuit breakers, DL / T 402-2016 voltage AC circuit breakers, DL / T 403-2000 technical conditions for ordering 12kV ~ 40.5kV high voltage vacuum circuit breakers, and GB / T 20840.2-2014 transformer part 2: supplementary technical requirements for current transformers, GB / T 20840.3-2014 transformer part 3: supplementary technical requirements for electromagnetic voltage transformer and DL / T 403-2013 distribution automation remote terminal and other technical standards.

2. MODEL AND MEANING

Z W 32 – 12 (G) Y / □ □

- Rated Current
- Operating Mechanism Type (T: Spring, M: Permanent Magnet)
- Prepaid Function
- With isolating Switch
- Rated Voltage
- Design Serial Number
- Outdoor
- Vacuum Circuit Breaker

3. USAGE: ENVIRONMENTAL CONDITIONS

1. Altitude: ≤ 1000 m. If the altitude is higher than 1000m, the rated insulation level shall be corrected.
2. Ambient air temperature: maximum 40 ℃, minimum - 25 ℃, daily temperature difference 25k
3. Temperature: daily average relative humidity ≤ 95%, monthly average relative humidity ≤ 90%
4. Sunshine intensity: 0.1W/cm^2
5. Icing thickness: not more than 10mm
6. Resistance to floor drain: horizontal acceleration 0.3g, vertical acceleration 0.2g
7. Outdoor Wind speed (Wind pressure): 34m/s (700Pa)
8. Pollution level: e-level

4. MAIN ADVANTAGES

1. The overall structure is a three-phase pillar type, with good sealing performance, good moisture-proof and anti-condensation performance;
2. The shell (box) is made of SUS304 non-magnetic stainless steel, which is precision welded and polished by an imported arc welding machine, with a beautiful appearance and never rusts;
3. The integrated design of the high-voltage metering box and the switch body is simple and convenient for installation, and maintenance free and long service life;
4. The price operating mechanism has a novel design, simple structure, reliable action, and small volume;
5. It can realize the functions of three-stage protection, reclosing, remote communication, metering, and prepayment.

.

ZW32-12Y PREPAID METERING VACUUM CIRCUIT BREAKER

5. TECHNICAL PARAMETER TABLE

High Voltage Metering Part Main Technical Parameters

No.	Item		Unit	Parameters
1	Rated Frequency		Hz	50 / 60
2	Power Factor (cosϕ)			0.8 (Lag)
3	Rated Breaking Current	3-Phase, 3-Wiring System	kV / min	10
		3-Phase, 4-Wiring System		10/ Root 3
4	Rated Primary Voltage	3-Phase, 3-Wiring System		0.1 / 0.22
		3-Phase, 4-Wiring System		(0.1 / Root 3) / 0.22
5	Voltage Transformer Wiring Method	3-Phase, 3-Wiring System		V - V
		3-Phase, 4-Wiring System		Y - Y
6	Rated Primary Current		A	5 ~ 600
7	Rated Secondary Current			5
8	Voltage Transformer Accuracy Level Times			0.2 / 3
9	Current Transformer Accuracy Level Times			0.2S
10	Voltage Transformer Rated Output		VA	15 / 200
11	Voltage Transformer Limited Output			500 (Level 3)
12	Current Transformer Rated Output			10
13	Polarity			Minus
14	Rated Short-Time Power Frequency Withstand Voltage		kV / min	42 / 1
15	Rated Lightning Impulse Withstand Voltage		kV	75

ZW32-12Y PREPAID METERING VACUUM CIRCUIT BREAKER

Vacuum Circuit Breaker Body Main Technical Parameters

No.	Item		Unit	Parameters	
1	Rated Frequency		Hz	50 / 60	
2	Rated Voltage		kV	12	
3	Rated Breaking Current		A	630	1250
4	Rated Short-time Power Frequency Withstand Voltage	Phase, To Earth (Wet)	kV / min	34 / 1	
		Phase, To Earth (Dry)		42 / 1	
		Fracture (Dry)		48 / 1	
		Secondary Circuit to Earth		2 / 1	
5	Lightning Impulse Withstand Voltage	Phase, To Earth	kV	75	
		Fracture		85	
6	Rated Short-Circuit Breaking Current		kA	20	25
7	Rated Short-Circuit Making Current (Effective value)			50	63
8	Rated Short-Time Withstand Current and Continuous Time		kA/s	20/4	25/5
9	Rated Peak Value Withstand Current		kA	50	63
10	Rated Short-Circuit Breaking Current Breaking Times		Times	30	
11	Rated Operating Voltage & Auxiliary (Control) Circuit Rated Voltage		V	AC/DC220, DC48, DC24	
12	Main Circuit Resistance	Without Isolation Switch	μΩ	≤ 80	
		With Isolation Switch		≤ 120	
13	Mechanical Life Span		Times	10000	
If the altitude is over 1000m, the rated insulation level should be modified as appropriate					

Note: If the parameters requested by the user are beyond the scope of the above table, they can be determined after consultation with our company.

ZW32-12Y PREPAID METERING VACUUM CIRCUIT BREAKER

6. OUTLINE AND INSTALLATION DIMENSIONS

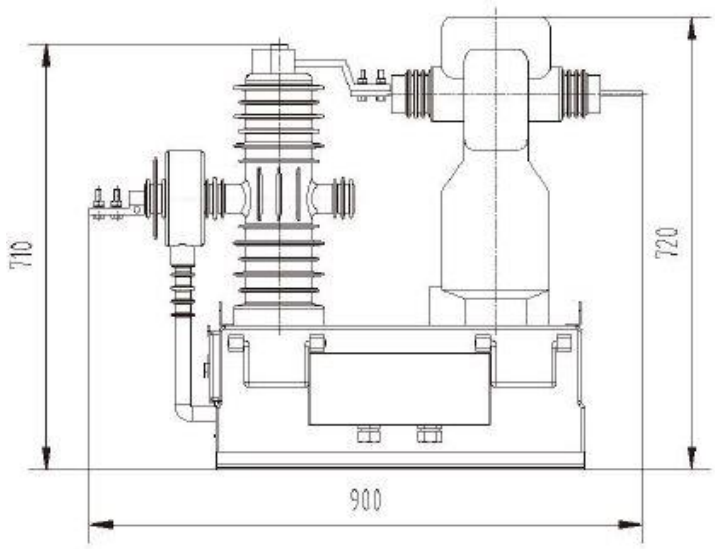

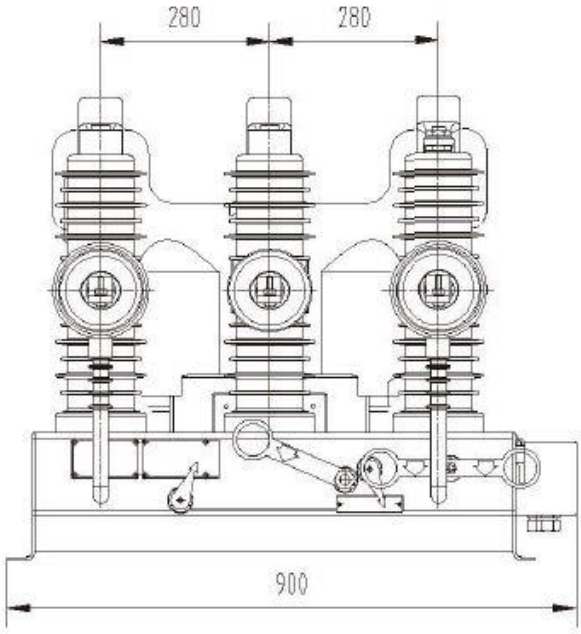

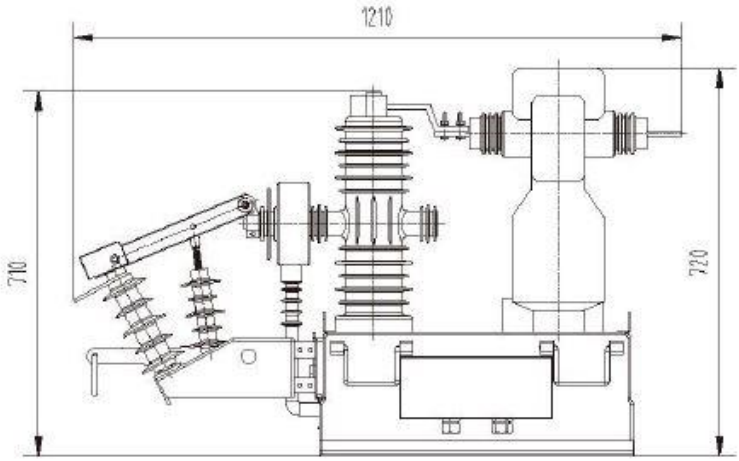

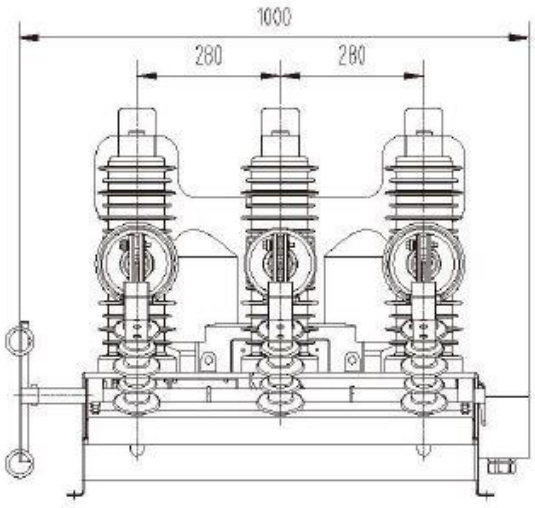

© DENGGAO ELECTRIC CO. LTD; ALL RIGHTS RESERVED

登高电气有限公司
DENGGAO ELECTRIC CO.,LTD.
HEADQUATERS: NO. 208 WEI WU ROAD, ECONOMIC DEVELOPMENT ZONE, YUEQING-WENZHOU, ZHEJIANG-CHINA
PHONE NUMBER: 0086-577-57576678
EMAIL ADDRESS: sale@dggpower.com

DGG 登高